ZT411/ZT421

Industrial Printer

User Guide

ZEBRA

ULINE H-8912

1-800-295-5510

0925 IH-8912VND

P1106464-05EN Rev A

2024/12/04

ZEBRA and the stylized Zebra head are trademarks of Zebra Technologies Corporation, registered in many jurisdictions worldwide. All other trademarks are the property of their respective owners. ©2024 Zebra Technologies Corporation and/or its affiliates. All rights reserved.

Information in this document is subject to change without notice. The software described in this document is furnished under a license agreement or nondisclosure agreement. The software may be used or copied only in accordance with the terms of those agreements.

For further information regarding legal and proprietary statements, please go to:

SOFTWARE: zebra.com/informationpolicy.
COPYRIGHTS: zebra.com/copyright.
PATENTS: ip.zebra.com.
WARRANTY: zebra.com/warranty.
END USER LICENSE AGREEMENT: zebra.com/eula.

Terms of Use

Proprietary Statement

This manual contains proprietary information of Zebra Technologies Corporation and its subsidiaries (“Zebra Technologies”). It is intended solely for the information and use of parties operating and maintaining the equipment described herein. Such proprietary information may not be used, reproduced, or disclosed to any other parties for any other purpose without the express, written permission of Zebra Technologies.

Product Improvements

Continuous improvement of products is a policy of Zebra Technologies. All specifications and designs are subject to change without notice.

Liability Disclaimer

Zebra Technologies takes steps to ensure that its published Engineering specifications and manuals are correct; however, errors do occur. Zebra Technologies reserves the right to correct any such errors and disclaims liability resulting therefrom.

Limitation of Liability

In no event shall Zebra Technologies or anyone else involved in the creation, production, or delivery of the accompanying product (including hardware and software) be liable for any damages whatsoever (including, without limitation, consequential damages including loss of business profits, business interruption, or loss of business information) arising out of the use of, the results of use of, or inability to use such product, even if Zebra Technologies has been advised of the possibility of such damages. Some jurisdictions do not allow the exclusion or limitation of incidental or consequential damages, so the above limitation or exclusion may not apply to you.

Contents

About this Guide..... 7
Notational Conventions..... 7
Icon Conventions..... 7

Printer Setup..... 9
Selecting a Location for the Printer..... 9
Ordering Supplies and Accessories..... 10
Media..... 10
Ribbon..... 11
Cable and Port Protector Bracket..... 11
Inspecting the Contents of the Box..... 12
Connecting the Printer to a Device..... 13
Connect to a Phone or Tablet..... 13
Installing Drivers and Connecting to a Windows-Based Computer..... 13
Connecting to a Computer Using the Printer's USB Port..... 20
Connecting to Your Network through the Printer's Ethernet Port..... 23
Connecting the Printer to Your Wireless Network..... 26
What to Do If You Forget to Install Printer Drivers First..... 29
Upgrading the Printer Firmware..... 32
Checking the Current Firmware Version..... 32
Uploading the Latest Firmware..... 32
Determining the Media Handling Method..... 33
Loading the Media..... 35
Inserting the Media into the Printer..... 36
Using Tear-Off Mode..... 40

Using Peel-Off Mode (with or without Liner Take-Up)....44
Using Rewind Mode....54
Using Cutter Mode or Delayed Cut Mode....62
Using Linerless Cut Mode....66
Determining the Type of Ribbon to Use....72
What Kind of Ribbon Can I Use?....72
Performing an Adhesive Test....72
Performing a Ribbon Scratch Test....72
Loading the Ribbon....73
Running the Print Wizard and Printing a Test Label....77
Using the Print Quality Assistance Wizard....79
Installing Label Design Software....80
ZebraDesigner System Requirements....80

Printer Configuration and Adjustment....81
Home Screen....81
Changing Printer Settings....83
Changing Printer Settings through the Windows Driver....84
Printer Wizards....84
User Menus....85
Calibrating the Ribbon and Media Sensors....131
Performing Auto Calibration....132
Performing Manual Sensor Calibration....132
Adjusting the Printhead Pressure....133
Adjusting the Sensor Position....138

Routine Maintenance....140
Cleaning Schedule and Procedures....140
Clean the Exterior, the Media Compartment, and the Sensors....142
Cleaning the Printhead and Platen Roller....143
Cleaning and Lubricating the Standard Cutter Module....147
Cleaning and Lubricating the Linerless Cutter....152
Removing Used Ribbon....156

Replacing Printer Components....157
Ordering Replacement Parts....157
Recycling Printer Components....157
Storing the Printer....157
Lubrication....158

Diagnostics and Troubleshooting....159
Evaluating Barcode Quality....160
Configuration Labels....162
PAUSE Self-Test....163
Sensor Profile....164
Using Communication Diagnostics Mode....165
Loading Defaults or Last Saved Values....166
Alert and Error States....167
Alerts and Error Messages....168
Indicator Lights....173
Troubleshooting....176
Printing or Print Quality Issues....176
Ribbon Issues....180
Linerless Printing Issues....182
RFID Issues....190
Communications Issues....193
Miscellaneous Issues....194
Servicing the Printer....197
Shipping the Printer....197

Using a USB Host Port and the Print Touch Feature....198
Items Required for the Exercises....198
Files for Completing the Exercises....199
USB Host....201
Exercise 1: Copy Files to a USB Flash Drive and Perform USB Mirror....201
Exercise 2: Print a Label Format from a USB Flash Drive....202
Exercise 3: Copy Files to/from a USB Flash Drive....205

Exercise 4: Enter Data for a Stored File with a USB Keyboard and Print a Label.....206
Print Touch/Near Field Communication (NFC).....208
Exercise 5: Enter Data for a Stored File with a Device and Print a Label..... 209

Specifications.....211
General Specifications..... 211
Power Specifications..... 212
Power Cord Specifications..... 212
Communication Interface Specifications.....214
Standard Connections.....215
Optional Connections.....217
Wireless Specifications..... 218
Printing Specifications.....219
Media Specifications.....221
Ribbon Specifications.....222

Glossary.....223

About this Guide

This document is intended for use by any person who needs to perform routine maintenance, upgrade, or troubleshoot problems with the ZT411/ZT421 printer.

Notational Conventions

The following notational conventions make the content of this document easy to navigate.

- **Bold** text is used to highlight the following:
  - Dialog box, window, and screen names
  - Dropdown list and list box names
  - Checkbox and radio button names
  - Icons on a screen
  - Key names on a keypad
  - Button names on a screen
- Bullets (•) indicate:
  - Action items
  - List of alternatives
  - Lists of required steps that are not necessarily sequential.
- Sequential lists (for example, those that describe step-by-step procedures) appear as numbered lists.

Icon Conventions

The documentation set is designed to give the reader more visual clues. The following graphic icons are used throughout the documentation set. These icons and their associated meanings are described below.



NOTE: The text here indicates information that is supplemental for the user to know and that is not required to complete a task.



IMPORTANT: The text here indicates information that is important for the user to know.



CAUTION—EYE INJURY: Wear protective eyewear when performing certain tasks such as cleaning the inside of a printer.



CAUTION—EYE INJURY: Wear protective eyewear when performing certain tasks such as installing or removing E-rings, C-clips, snap rings, springs, and mounting buttons. These parts are under tension and could fly off.



CAUTION—PRODUCT DAMAGE: If the precaution is not taken, the product could be damaged.

CAUTION: If the precaution is not heeded, the user could receive a minor or moderate injury.



CAUTION—HOT SURFACE: Touching this area could result in burns.



CAUTION—ESD: Observe proper electrostatic safety precautions when handling static-sensitive components such as circuit boards and printheads.



CAUTION—ELECTRIC SHOCK: Turn off (O) the device and disconnect it from the power source before performing this task or task step to avoid the risk of electric shock.



WARNING: If danger is not avoided, the user CAN be seriously injured or killed.



DANGER: If danger is not avoided, the user WILL be seriously injured or killed.

Printer Setup

This section assists a user with initial setup and operation of the printer.

Selecting a Location for the Printer

Select a location for the printer that meets these conditions:

- Surface—The surface where the printer will be located must be solid, level, and of sufficient size and strength to hold the printer.

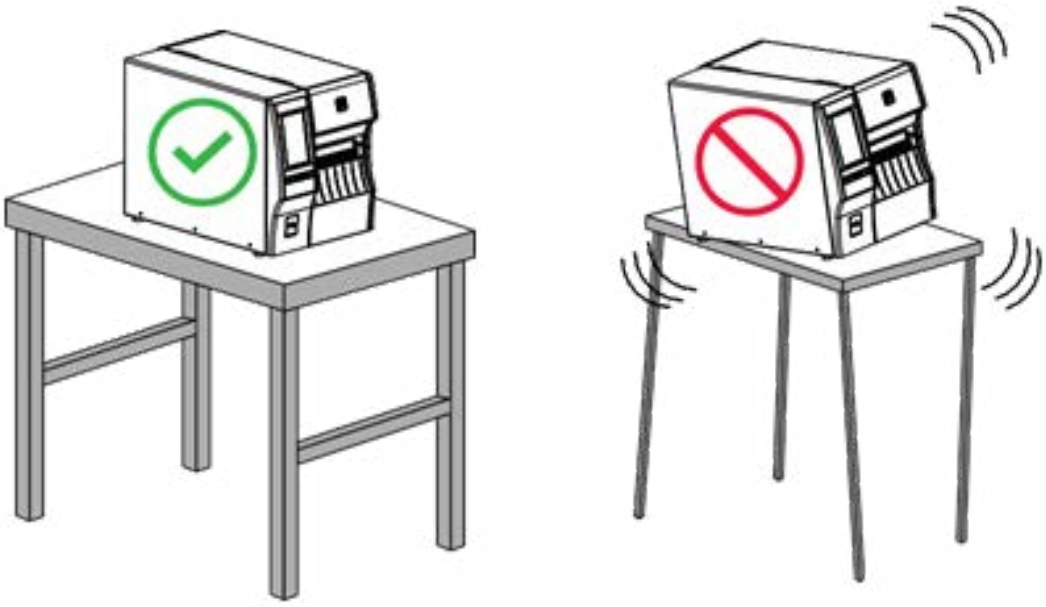

- Space—The area where the printer will be located must include enough space for ventilation and for accessing the printer components and connectors. To allow for proper ventilation and cooling, leave open space on all sides of the printer.

CAUTION: Do not place any padding or cushioning material behind or under the printer because this restricts air flow and could cause the printer to overheat.

- Power—The printer should be within a short distance of an appropriate power outlet that is easily accessible.
- Data communication interfaces—The printer must be within range of your WLAN radio (if applicable) or within an acceptable range for other connectors to reach your data source (usually a computer). For more information on maximum cable lengths and configuration, see Communication Interface Specifications on page 214.
- Operating conditions—The printer is designed to function in a wide range of environmental and electrical conditions, including a warehouse or factory floor. The following table shows the temperature and relative humidity requirements for the printer when it is operating.

Table 1 Operating Temperature and Humidity

Mode	Temperature	Relative Humidity
Thermal Transfer	40° to 104°F (5° to 40°C)	20 to 85% non-condensing
Direct Thermal	32° to 104°F (0° to 40°C)	

Ordering Supplies and Accessories

You need to purchase certain supplies before you set up your printer, and you may choose to purchase accessories for the printer.

The following things that you will need do NOT come with the printer:

- Communication/network cables (such as serial or wired Ethernet) other than USB
- Media
- Ribbon (if your printer has a thermal transfer option)

For recommended supplies to ensure optimal operation of your printer, go to zebra.com/supplies.

Media

The type and size of media that you choose should be appropriate for the options installed on the printer (see Determining the Media Handling Method on page 33. Refer to the media specifications for the printer for minimum label lengths and other important things to consider.

For optimal printing quality and proper printer performance across the product lines, Zebra strongly recommends the use of Zebra Certified Supplies as part of the total solution. A wide range of paper, polypropylene, polyester, and vinyl stock has been specifically engineered to enhance the printing capabilities of the printer and to prevent premature printhead wear. To purchase supplies, go to zebra.com/supplies.

The Glossary includes terms associated with media, such as black mark media, gap/notch media, linerless media, RFID media, fanfold media, and roll media. Use these terms to help determine which type of media will suit your needs.

See Also

Media Specifications

ULINE H-8912
1-800-295-5510
0925 IH-8912VND

Ribbon

NOTE: This section applies only to printers that have the Thermal Transfer option installed.

Do I need to use ribbon?	The media itself determines if you will need to use ribbon. • Thermal Transfer media—Requires ribbon. • Direct Thermal media—Does NOT require ribbon.
How can I tell if media is Direct Thermal or Thermal Transfer? (See direct thermal on page 224 and thermal transfer on page 231 for definitions.)	The easiest way to find out is to scratch the surface of the media rapidly with your fingernail. If a black mark appears where you scratched, the media is Direct Thermal, so you do NOT need ribbon.
What kind of ribbon can I use?	This printer can use ONLY ribbon coated on the outside, unless you purchase and install the optional spindle that allows the use of ribbon coated on the inside. Contact your authorized Zebra reseller for ordering information.
How can I tell which side of the ribbon is coated?	Use one of these two methods to determine which side of the ribbon is coated: • Performing an Adhesive Test on page 72. • Performing a Ribbon Scratch Test on page 72.

Cable and Port Protector Bracket

To enhance the durability and longevity of your printer, consider using the specially designed Cable and Port Protector Bracket (sold separately). This accessory provides robust protection for the printer's cable connections and ports, safeguarding them from accidental damage and wear.

The cable and port protector includes the following key features:

- **Durable Construction:** Made from high-quality injected molded materials to ensure long-lasting protection.
- **Easy Installation:** The kit includes all necessary components, screws, and "hook & loop" repositionable straps, allowing you to upgrade your printer's protection quickly and with minimal downtime.
- **Universal Fit:** Compatible with all ZT411, ZT411R, ZT421, and ZT421R models.

The Cable and Port Protector Bracket (Zebra part number P1105147-038) is an optional accessory that must be purchased separately. For more information on purchasing the kit, contact your authorized Zebra representative.

ULINE H-8912
1-800-295-5510

Inspecting the Contents of the Box

Ensure that the printer box contains all the items you need to set it up.

IMPORTANT: Zebra Technologies is not responsible for any damage incurred during the shipment of the equipment and will not repair this damage under warranty.

1. Carefully remove the printer from the box, and verify that the following items are included in the box with the printer:

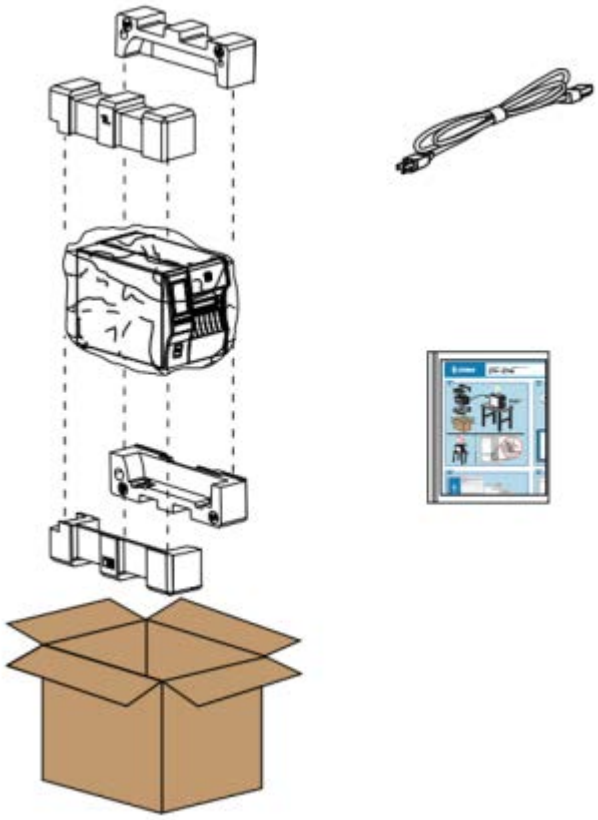

   Additional items may be included, depending on the options ordered with the printer.
2. If anything is missing, notify your authorized Zebra reseller.
3. Immediately unwrap the printer and inspect for shipping damage.
   - Save all packing materials.
   - Check all exterior surfaces for damage.
   - Raise the media door, and inspect the media compartment for damage to components.
4. If you discover shipping damage upon inspection:
   - Immediately notify the shipping company and file a damage report.
   - Keep all packaging material for shipping company inspection.
   - Notify your authorized Zebra reseller.
5. The printer shipped with several protective items for shipping, including a film of plastic over the transparent window on the media door. Before operating the printer, remove these protective items.

Connecting the Printer to a Device

After you have set up the printer, you are ready to connect the printer to your device (such as a computer, phone, or tablet).

Connect to a Phone or Tablet

Download the free Zebra Printer Setup Utility app for your device.

- Android devices
- Apple devices

The applications support the following types of connectivity:

- Bluetooth Classic
- Bluetooth Low Energy (Bluetooth LE)
- Wired/Ethernet
- Wireless
- USB On-The-Go

For the User Guides for these printer setup utilities, go to zebra.com/setup.

Installing Drivers and Connecting to a Windows-Based Computer

To use your printer with a Microsoft Windows-based computer, you must install the correct drivers first.

IMPORTANT: You may connect your printer to your computer using any of the connections that you have available. However, do not connect any cables from your computer to the printer until you are instructed to do so. If you connect them at the wrong time, your printer will not install the correct printer drivers. To recover from incorrect driver installation, see What to Do If You Forget to Install Printer Drivers First on page 29.

Installing the Drivers

Follow these steps to install the correct drivers.

1. Navigate to zebra.com/drivers.
2. Click **Printers**.
3. Select your printer model.
4. On the printer product page, click **Drivers**.
5. Download the appropriate driver for Windows.

   The driver executable file (such as `zd86423827-certified.exe`) is added to your Download folder.

6. Run the executable file and follow the prompts.

   When setup is complete, you may select to add all of the drivers to your system (**Configure System**) or to add/configure specific printers (see Running the Printer Installation Wizard).

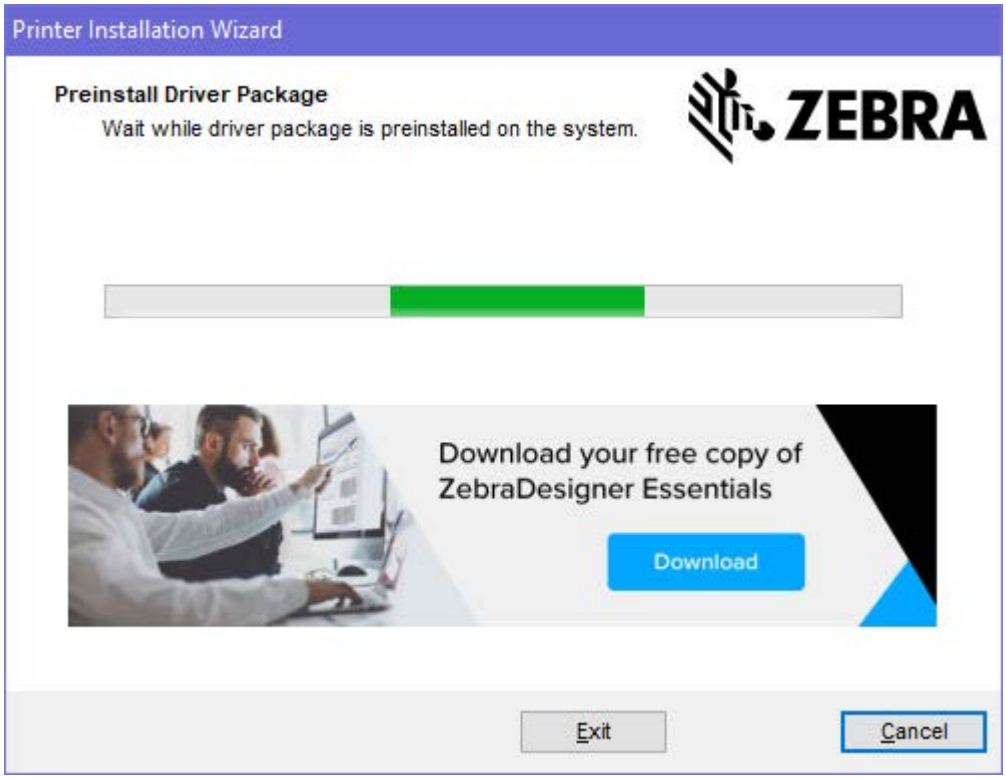

7. Select **Configure System**, and then click **Finish**.

   The Printer Installation Wizard installs the drivers.

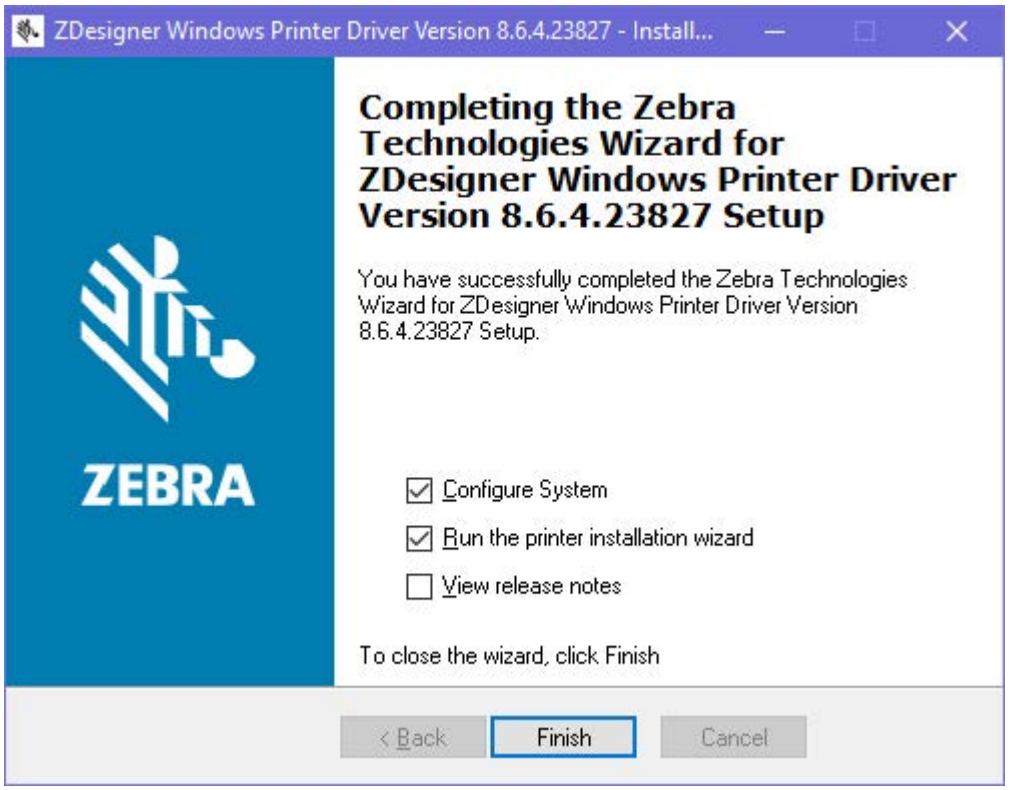

Running the Printer Installation Wizard

1. On the last screen of the driver installer, leave **Run the Printer Installation Wizard** checked, then click **Finish**.

   The Printer Installation wizard displays.

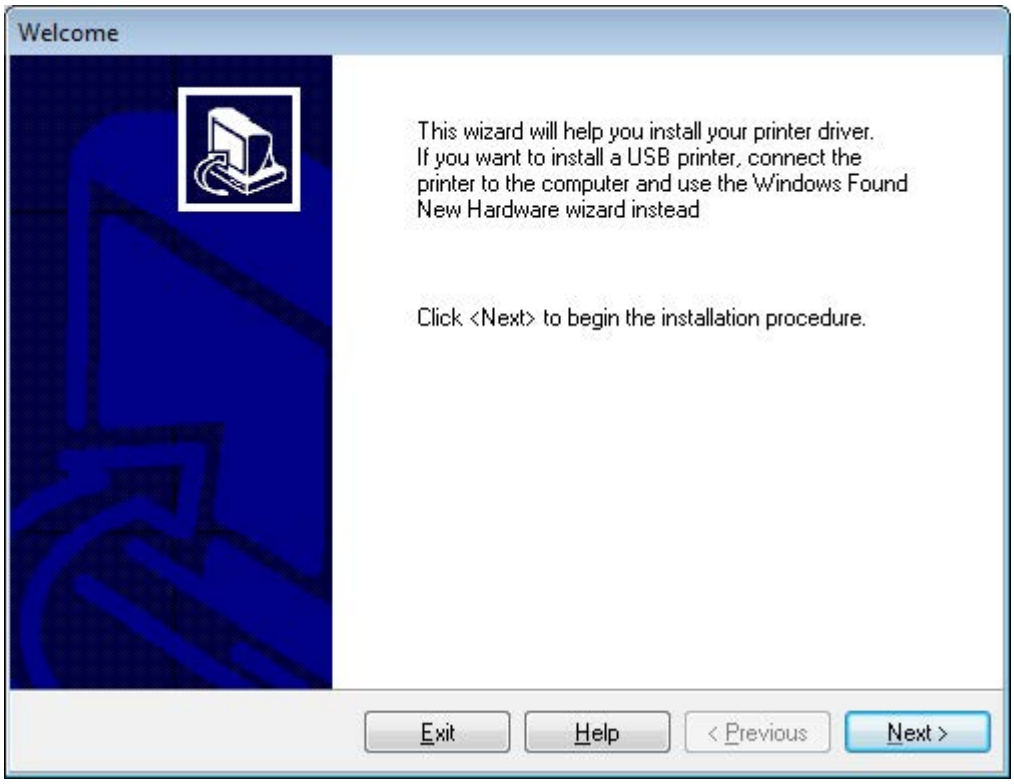

2. Click **Next**.

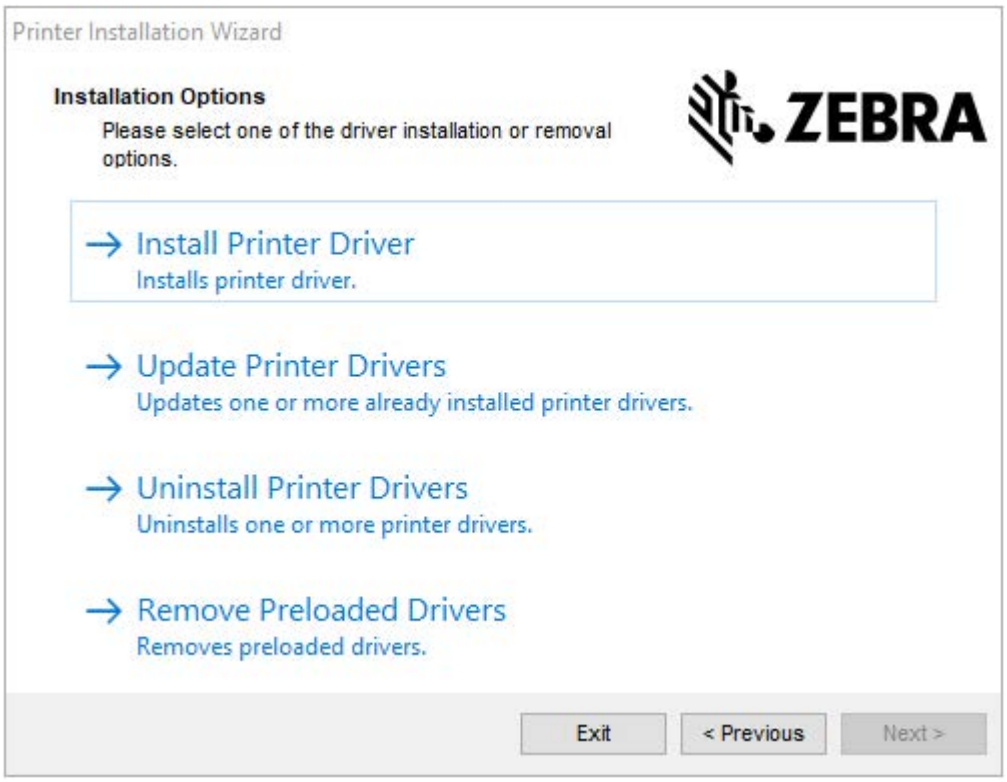
Printer Installation Wizard
Installation Options
Please select one of the driver installation or removal options.
ZEBRA
Install Printer Driver
Installs printer driver.
Update Printer Drivers
Updates one or more already installed printer drivers.
Uninstall Printer Drivers
Uninstalls one or more printer drivers.
Remove Preloaded Drivers
Removes preloaded drivers.
Exit
< Previous
Next >

3. Click **Install Printer Driver**.

   The license agreement displays.



4. Read and accept the terms of the license agreement, and then click **Next**.

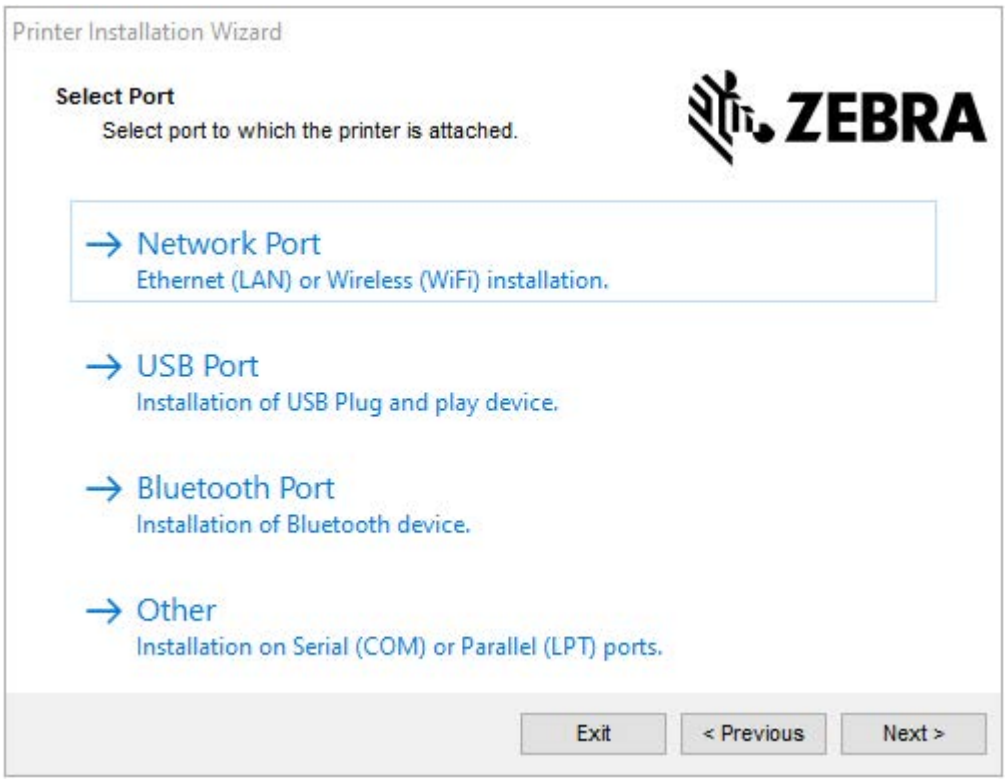

5. Select the communication option that you want to configure for your printer:
   - Network Port—or installing printers with an Ethernet (LAN) or wireless (Wi-Fi) network connection. Wait for the driver to scan your local network for devices and follow the prompts. If necessary, set the values as directed in Connecting to Your Network through the Printer's Ethernet Port on page 23 or in Connecting the Printer to Your Wireless Network on page 26.
   - USB Port—For installing printers connected with the USB cable. Connect the printer to the computer as shown in Connecting to a Computer Using the Printer's USB Port on page 20. If the printer is already connected and powered on, you may need to remove the USB cable and install it again. The driver will automatically search for the model of the connected printer.
   - Bluetooth Port—For installing printers with a Bluetooth connection.
   - Other—For installation using another type of cable, such as Parallel (LPT) and Serial (COM). No additional configuration is necessary.
6. If prompted, select your printer model and resolution.

   The model and resolution are on a part number sticker on the printer, usually located below the media hanger. The information will be in the following format:

```
Part Number: XXXXXxY – xxxxxxxx
```

   where

   `XXXXX` = the printer model, and `Y` = the printer resolution (`2` = 203 dpi, `3` = 300 dpi, `6` = 600 dpi).

   For example, in the part number `ZT411x3 – xxxxxxxx`, `ZT411` indicates that the printer is a ZT411 model, and `3` indicates that the printhead resolution is 300 dpi.

Connecting to a Computer Using the Printer's USB Port

1. After you install the drivers, remove the label that covers the USB port.

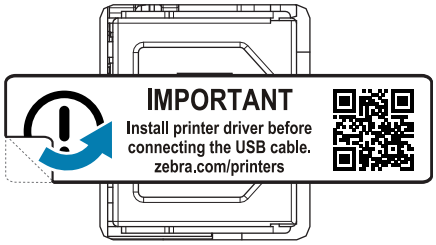

2. Connect the USB cord to the USB port on your printer.

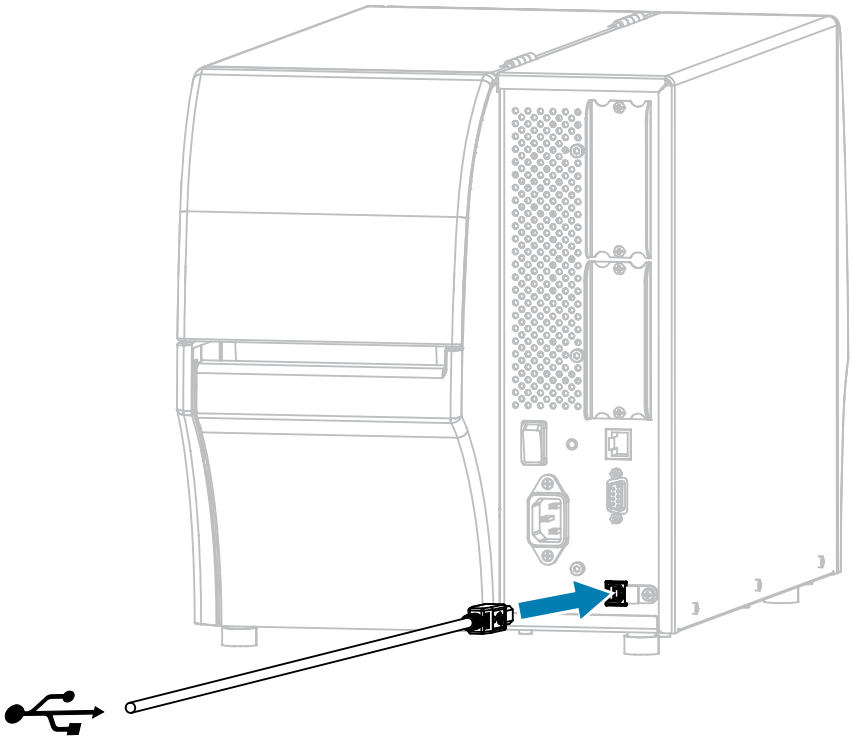

3. Connect the other end of the USB cord to your computer.

4. Plug the A/C power cord into the A/C power connector on the back of the printer.

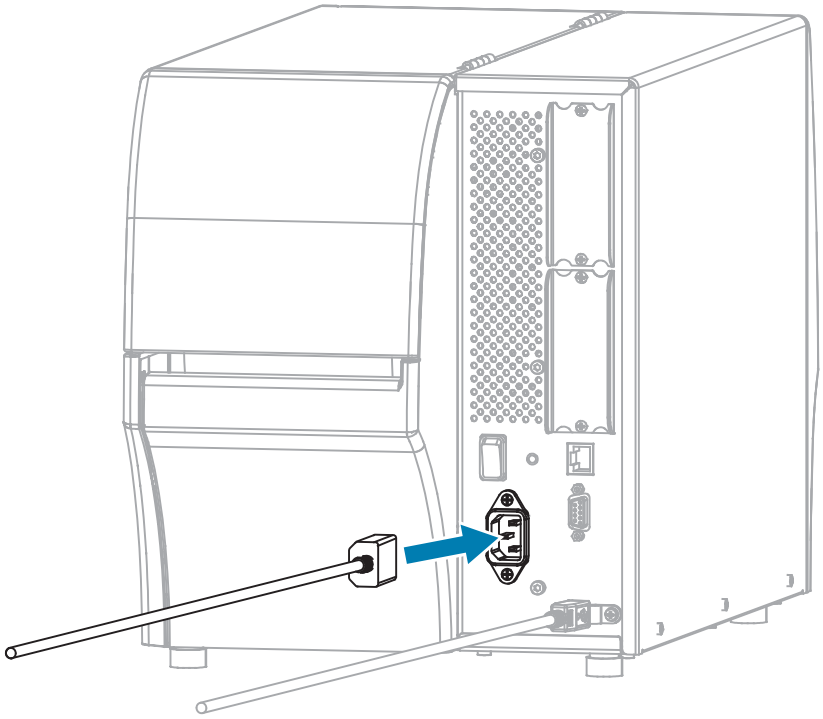

5. If desired, install a cable and port protector bracket (Zebra part number P1105147-038, sold separately). For purchasing information, contact your authorized Zebra representative.

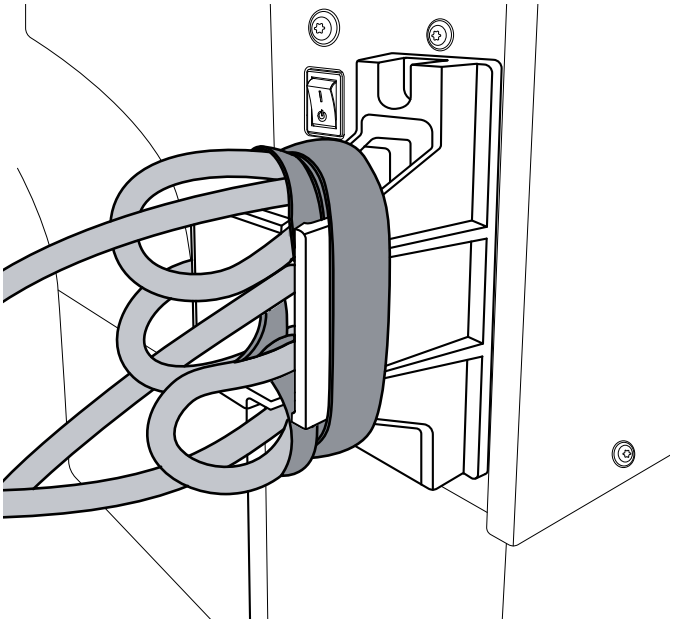

6. Plug the A/C power cord into an appropriate power outlet.

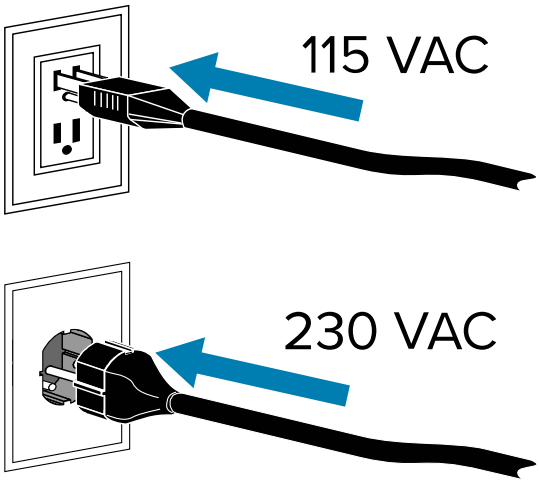

7. Turn on (**I**) the printer.

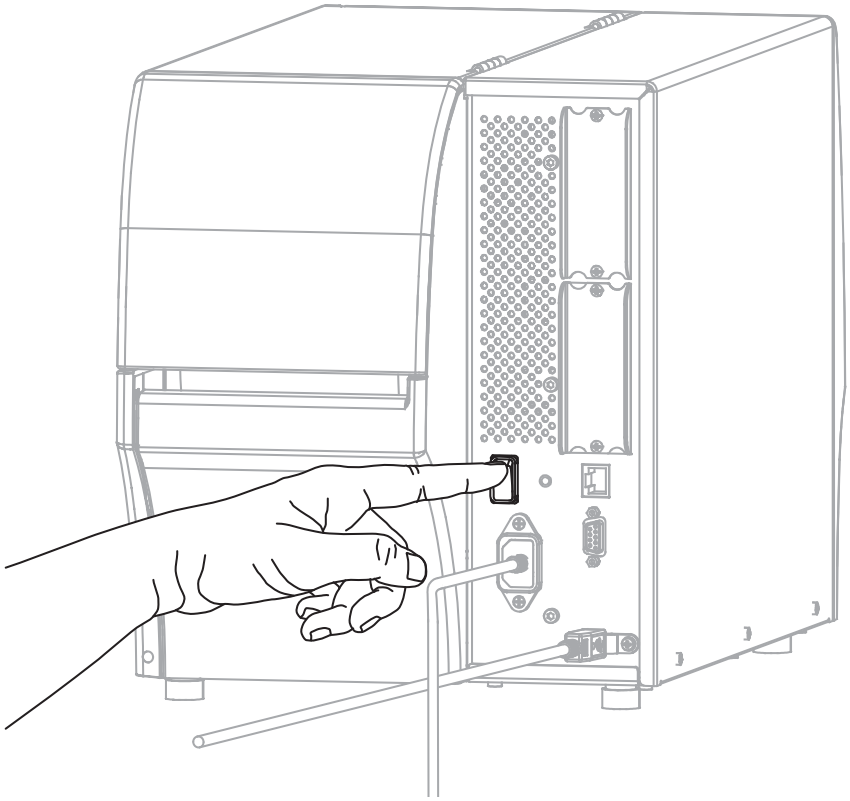

As the printer boots up, your computer completes the driver installation and recognizes your printer.

CAUTION—PRODUCT DAMAGE: If you need to power cycle the printer, allow it to fully boot up first. Then after turning it off, wait 30 seconds before turning it back on. Power cycling the printer too quickly can cause issues.

If you did not install the drivers first, see What to Do If You Forget to Install Printer Drivers First on page 29.

Connecting to Your Network through the Printer's Ethernet Port

To use a wired print server (Ethernet) connection, you may need to configure the printer to communicate with your Local Area Network (LAN).

For additional information about Zebra print servers, refer to the ZebraNet Wired and Wireless Print Server User Guide. To download the latest version of this guide, go to zebra.com/manuals.

1. After you install the drivers (see Installing the Drivers on page 13), connect the printer to an Ethernet cable that is connected to your network.

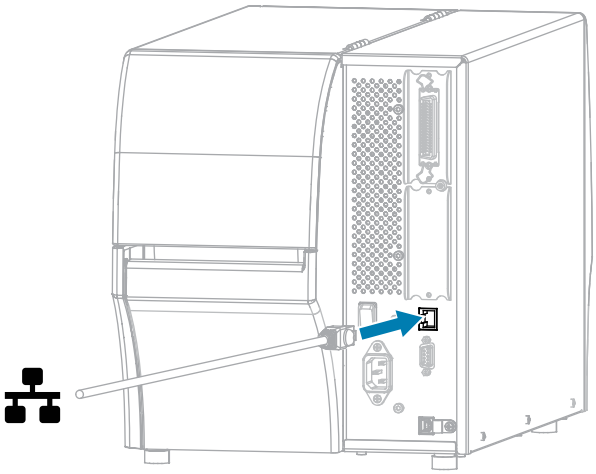

2. Plug the A/C power cord into the A/C power connector on the back of the printer.

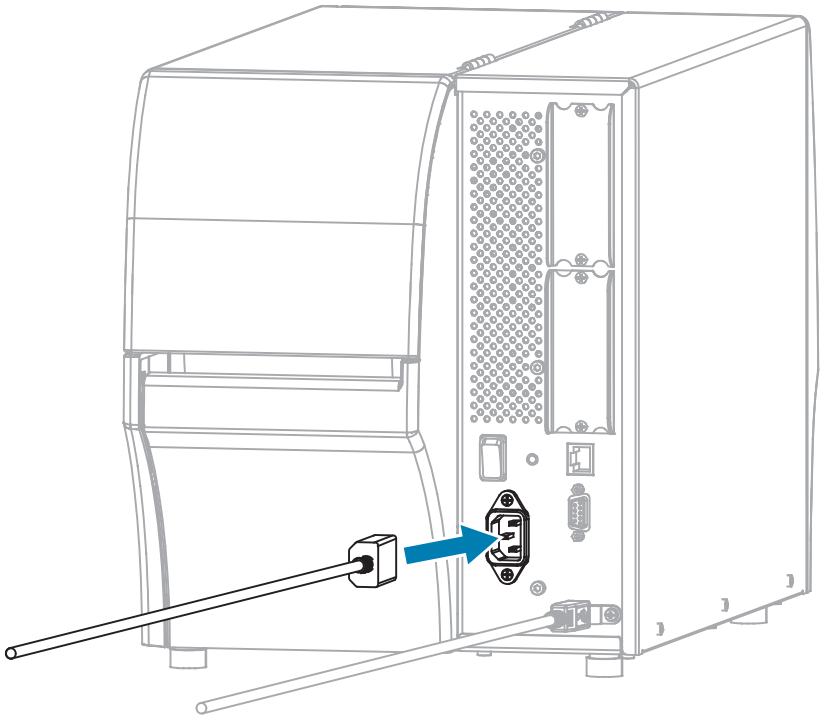

3. If desired, install a cable and port protector bracket (Zebra part number P1105147-038, sold separately). For purchasing information, contact your authorized Zebra representative.

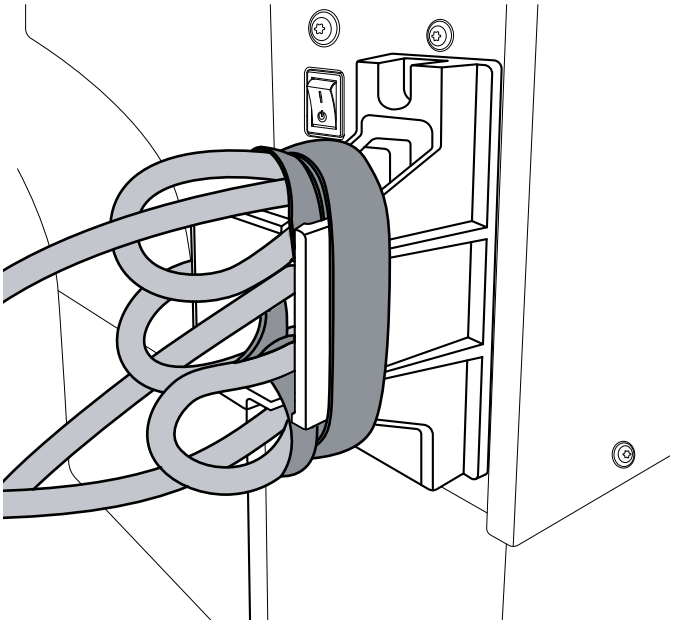

4. Plug the A/C power cord into an appropriate power outlet.

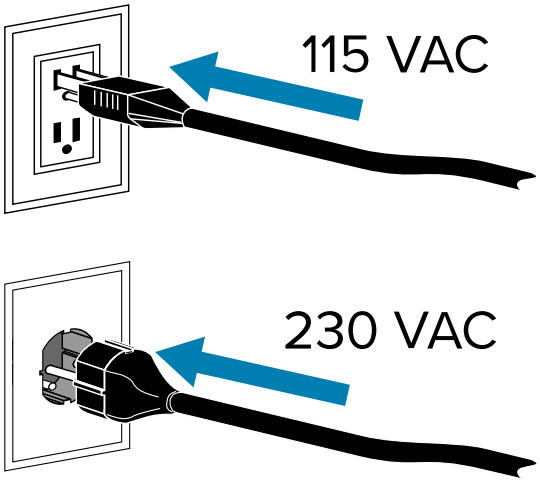

5. Turn on (**I**) the printer.

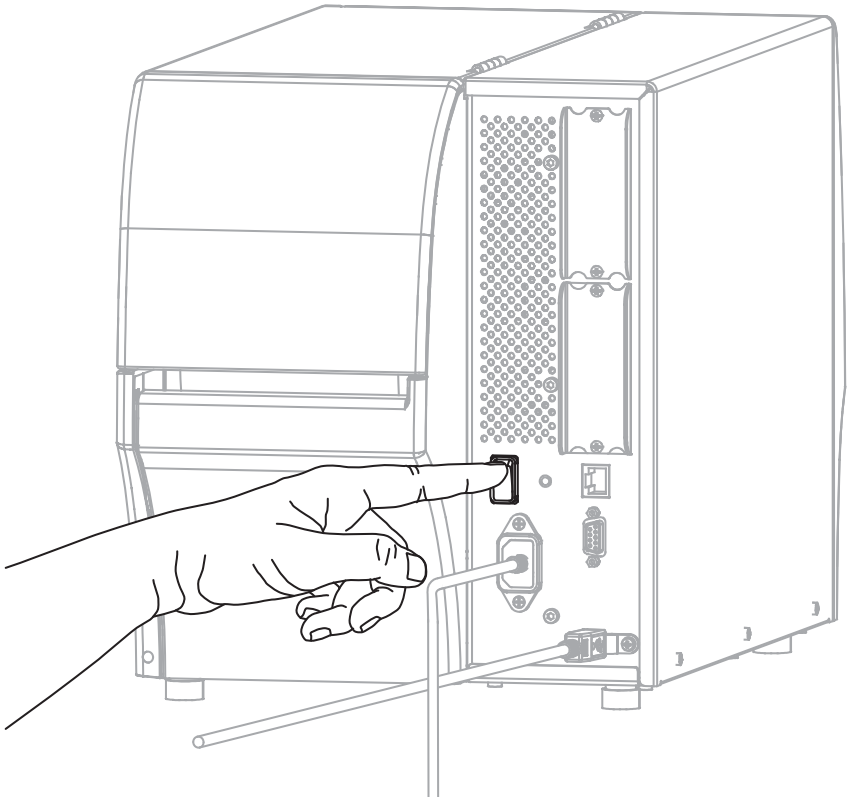

The printer attempts to communicate with your network. If it is successful, it fills in your LAN's gateway and subnet values and gets an IP address.

CAUTION—PRODUCT DAMAGE: If you need to power cycle the printer, allow it to fully boot up first. Then after turning it off, wait 30 seconds before turning it back on. Power cycling the printer too quickly can cause issues.

If you did not install the drivers first, see What to Do If You Forget to Install Printer Drivers First on page 29.

6. On the Home screen, touch the Printer Info tab. Check the display to see if an IP address was assigned to the printer.

If the printer's IP address is...	Then...
0.0.0.0 or 000.000.000.000	The NETWORK light is off or displays steady red. (See Indicator Lights on page 173 for more information.) **a.** Check the Ethernet connector on the back of the printer. If no light is on or blinking, the Ethernet connection is not active. Check that both ends of the cord are plugged in correctly and that the network port that you are plugging into is active. When this issue is resolved, the printer should connect automatically. **b.** If necessary, configure the following printer settings to set a static IP address and then reset the network. Contact your network administrator for the proper values for your network. • Connection > Wired > Wired IP Protocol—Change the value from ALL to PERMANENT. • Connection > Wired > Wired Gateway—Match the gateway value of your LAN. • Connection > Wired > Wired Subnet—Match the subnet value of your LAN. • Connection > Wired > Wired IP Address—Assign a unique IP address to the printer. • IP Address (wired or WLAN)—Assign a unique IP address to the printer.
any other value	The connection was successful. The NETWORK light displays steady green or yellow, depending on the network. (See Indicator Lights on page 173 for more information.)

7. Reset the network (see Connection > Networks > Reset Network) to allow changes to the network settings to take effect.

Connecting the Printer to Your Wireless Network

If you wish to use the printer's optional wireless print server, you may need to configure the printer to communicate with your Wireless Local Area Network (WLAN) through the wireless print server.

For additional information about Zebra print servers, refer to the ZebraNet Wired and Wireless Print Server User Guide. To download the latest version of this guide, go to zebra.com/manuals.

1. Install the drivers as instructed in Installing Drivers and Connecting to a Windows-Based Computer on page 13.

2. Plug the A/C power cord into the A/C power connector on the back of the printer.

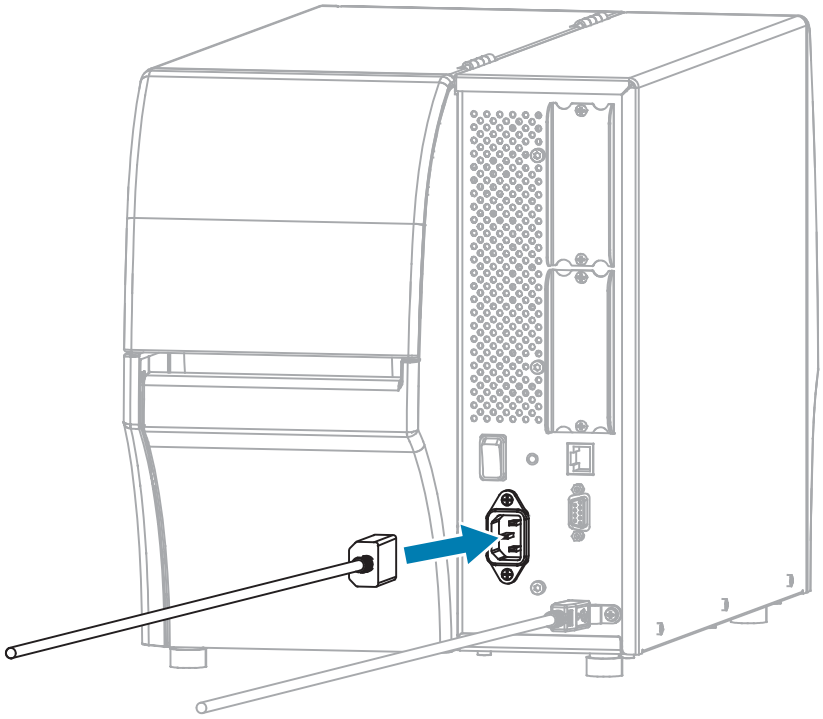

3. Plug the A/C power cord into an appropriate power outlet.

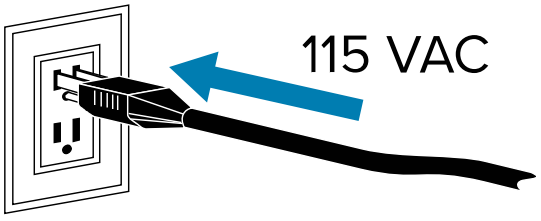

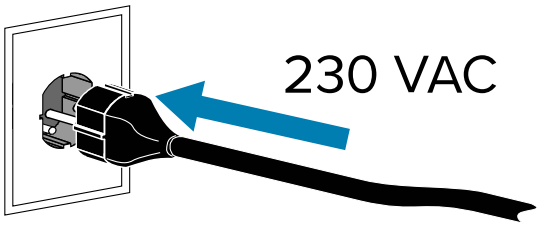

4. Turn on (**I**) the printer.

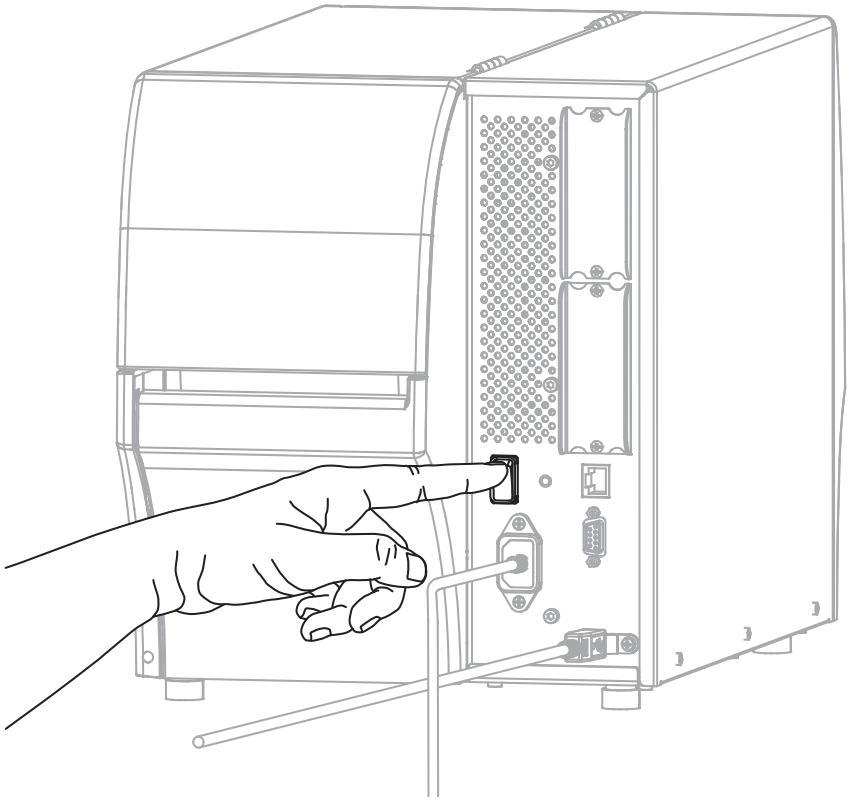

As the printer boots up, your computer completes the driver installation and recognizes your printer.

CAUTION—PRODUCT DAMAGE: If you need to power cycle the printer, allow it to fully boot up first. Then after turning it off, wait 30 seconds before turning it back on. Power cycling the printer too quickly can cause issues.

If you did not install the drivers first, see What to Do If You Forget to Install Printer Drivers First on page 29.

5. If necessary, specify the ESSID value that matches the value used by your wireless router. Check with your network administrator for the ESSID value to use. See Connection > Networks > ESSID for ways to change the value.
6. If necessary, configure the following printer settings. Contact your network administrator for the proper values for your network.
   - Connection > WLAN > WLAN Gateway—Match the gateway value of your WLAN.
   - Connection > WLAN > WLAN Subnet—Match the subnet value of your WLAN.
7. Reset the network (see Connection > Networks > Reset Network) to allow changes to the network settings to take effect.
8. If the printer still does not connect, consider setting a static IP address by configuring the following additional settings, and then reset the network again. Contact your network administrator for the proper values for your network.
   - Connection > WLAN > WLAN IP Protocol—Change the value from ALL to PERMANENT.)
   - Connection > WLAN > WLAN IP Address—Assign a unique IP address to the printer.

What to Do If You Forget to Install Printer Drivers First

If you plug in your Zebra printer before installing the drivers, the printer displays as an Unspecified device.

1. Follow the instructions in Installing Drivers and Connecting to a Windows-Based Computer on page 13 to download and install the drivers.
2. From the Windows menu, open the Control Panel.
3. Click **Devices and Printers**.

   In this example, the MZ320 is an incorrectly-installed Zebra printer.



4. Right-click on the device, and select **Properties**.

   The properties for the device display.



5. Click the **Hardware** tab.

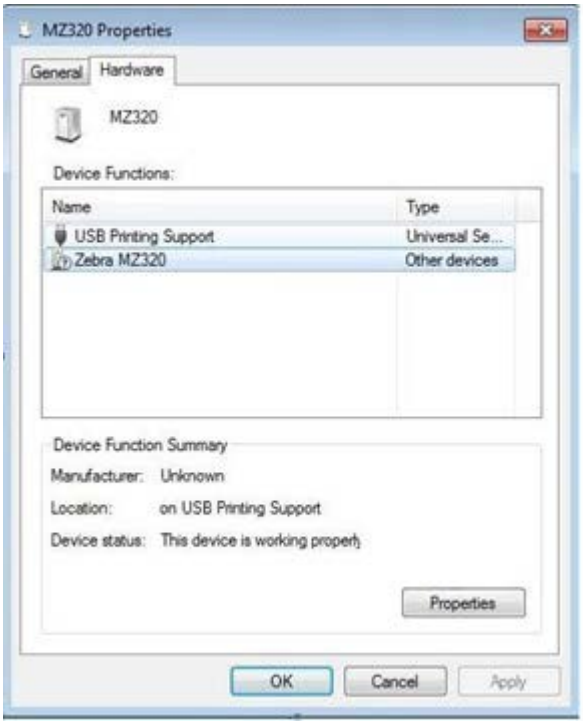

6. Select the Zebra printer in the **Device Functions** list, then click **Properties**.

   The properties display.

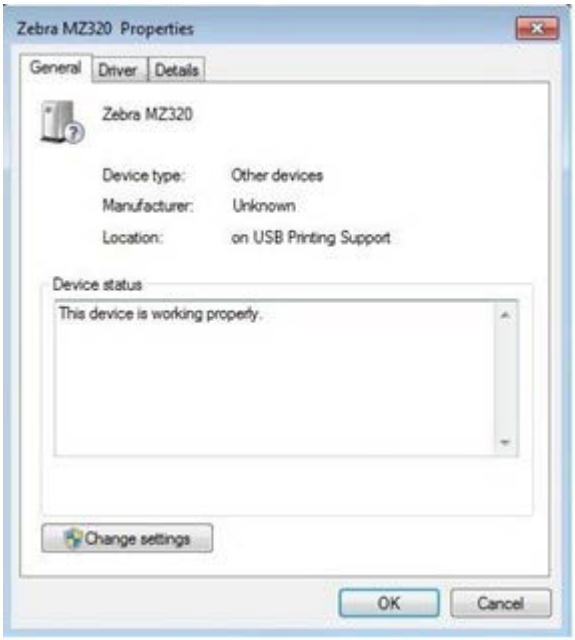

7. Click **Change settings**, then click the **Driver** tab.



8. Click **Update Driver**.

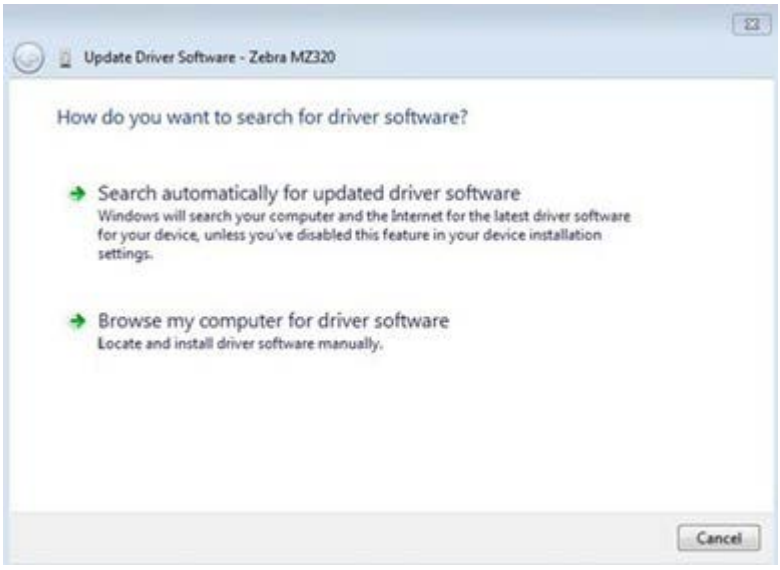

9. Click **Browse my computer for driver software**.
10. Click **Browse...** and navigate to the Downloads folder.

11. Click **OK** to select the folder.



12. Click **Next**.

The device is updated with the correct drivers.

Upgrading the Printer Firmware

To use the latest features, make sure that the printer is updated with the latest firmware for your printer model. To find the latest firmware, navigate to the support page for your printer on zebra.com, and then click the **Downloads** tab.

Checking the Current Firmware Version

You can check the firmware version using the printer's control panel or a printer configuration label.

1. On the printer's Home Screen, touch**Printer Info**.
2. Verify that the Link-OS Version is 7.0 or later.

Uploading the Latest Firmware

For the latest features, update your printer to the latest v92 operating system.

1. Navigate tozebra.com/zt411-info.
2. Click the**Downloads**tab.
3. Click the**Printer OS v92**entry on the Downloads tab.
4. For the`.zip`file entry, click**DOWNLOAD**.
5. Read the End User License Agreement, click the box to accept the terms and conditions, and then click**DOWNLOAD**.
6. In your Downloads folder, locate the`V92.xx.xxx.zip`file and extract the contents to your computer.

7. Using the software or utility of your choice (such as the ZDownloader utility, also available on the Downloads tab), upload the`V92.xx.xxx.zpl`file to your printer.

   The printer downloads the firmware and installs it. When the installation is complete, the printer reboots.

Determining the Media Handling Method

Before loading media, decide on a media handling method that matches the media being used and the printer options available.

Figure 1 Printer Options

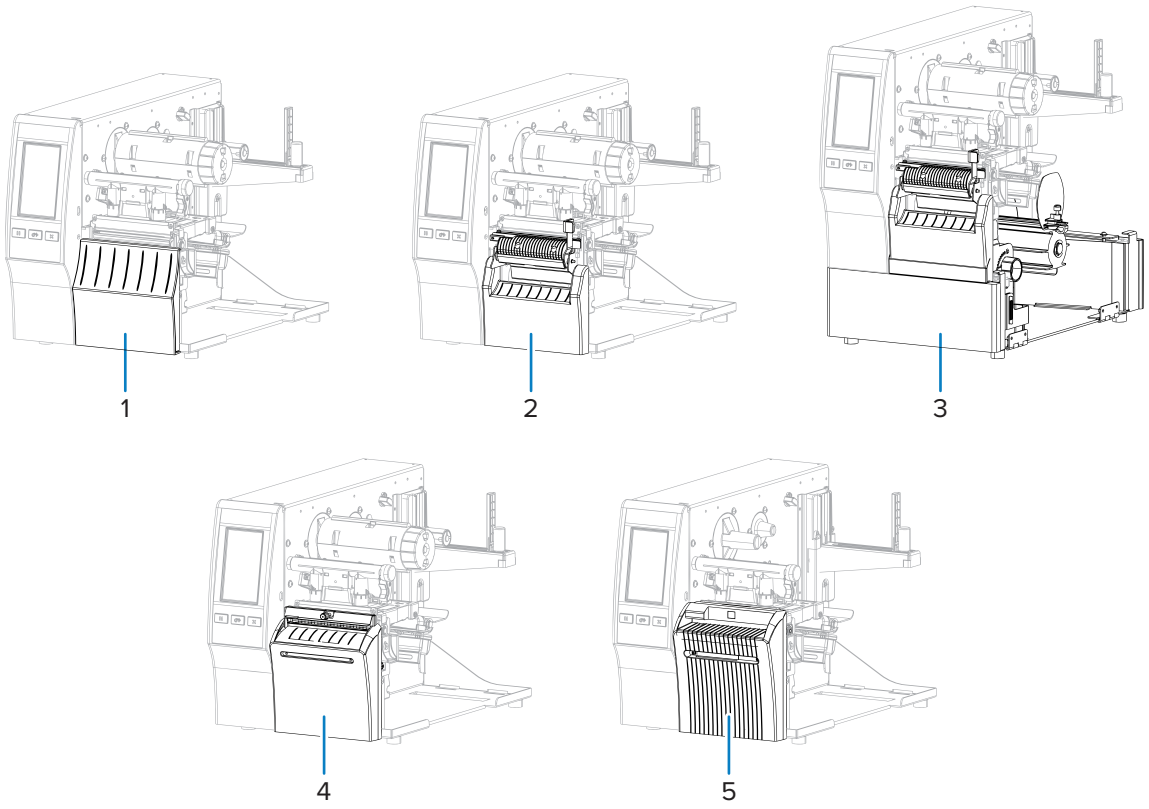

1	Tear-Off (standard)	4	Cutter option
2	Peel with Liner Take-Up option	5	Linerless cutter option
3	Rewind option		

Table 2 Media Handling Methods and Printer Options

Method	Required Printer Option	Description
Tear Off	Can be used with any printer option and most media types.	The printer prints label formats as it receives them. The printer operator can tear off the printed labels when the printer stops.

Table 2 Media Handling Methods and Printer Options (Continued)

Method	Required Printer Option	Description
Peel Off	Peel, Liner Take-Up, or Rewind option	The printer peels the label from the backing during printing and then pauses until the label is removed. The empty backing may be allowed to exit the front of the printer, or it may be wound onto the liner take-up spindle or rewind spindle.
Rewind	Rewind option	The printer prints without pausing between labels. The media is wound onto a core after printing. The rewind plate is used to keep the labels from separating from the backing.
Cutter*	Cutter option	The printer cuts between labels after each one is printed.
Delayed Cut*	Cutter option	The printer waits for a delayed cut ZPL command (~JK) before it cuts the last printed label.
Applicator	Applicator port connection required. This mode is for use with a machine that applies labels.	The printer prints when it receives a signal from the applicator. Authorized Service Technicians should refer to the Maintenance Manual for additional information about the applicator interface.
Linerless Cut	Linerless cutter option*	The printer cuts between labels after each one is printed.
Linerless Delayed Cut	Linerless cutter option*	The printer waits for a delayed cut ZPL command (~JK) before it cuts the last printed label.

NOTE: * For the linerless cutter to behave as a standard cutter on a printer with firmware older than v 7.0, the Media Handling method (possibly called Collection method) must be set to Cutter.

NOTE: Linerless Peel, Linerless Rewind, and Linerless Tear are options reserved for future use.

1. On the Home screen, touch **Menu** > **Print** > **Image Adjust** > **Media Handling**.

   The Media Handling options display.



2. Select a method that matches the media being used and the printer options available.
3. Touch the **Home** icon to return to the Home screen.

See Also
Print Menu

Loading the Media

Use the instructions in this section for loading roll or fanfold media in the appropriate label collection method for your needs.

IMPORTANT: You are not required to turn off the printer power when working near an open printhead, but Zebra recommends it as a precaution. If you turn off the power, you will lose all temporary settings, such as label formats, and you must reload them before you resume printing.

NOTE: The media path is the same for roll and fanfold media.

Inserting the Media into the Printer

1. Raise the media door.

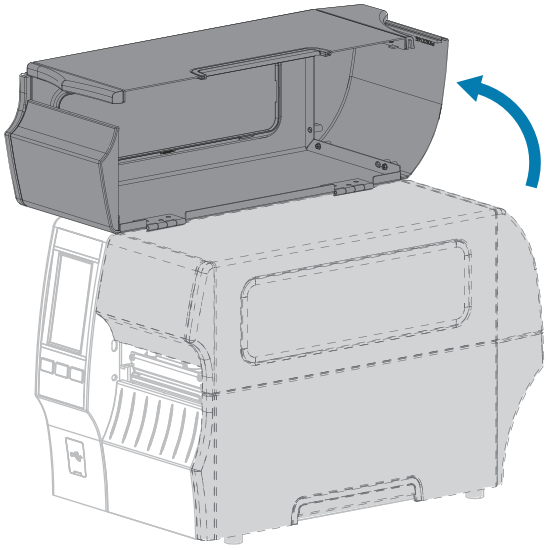

2. Remove and discard any tags or labels that are torn or dirty or that are held by adhesives or tape.

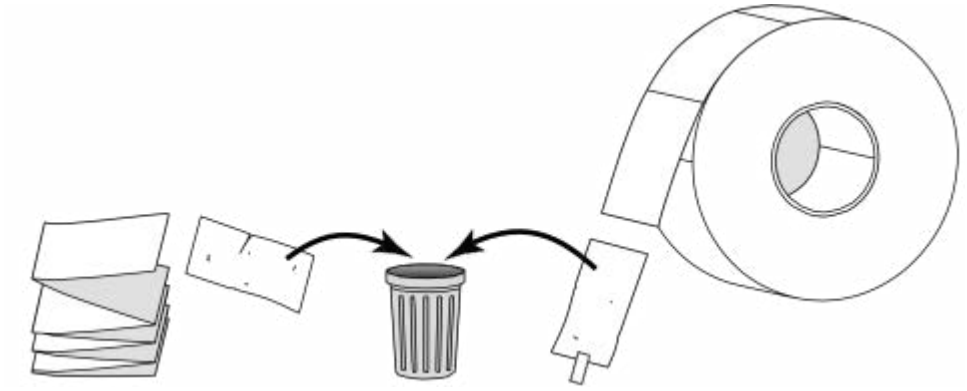

3. Pull out the media supply guide as far as it goes.

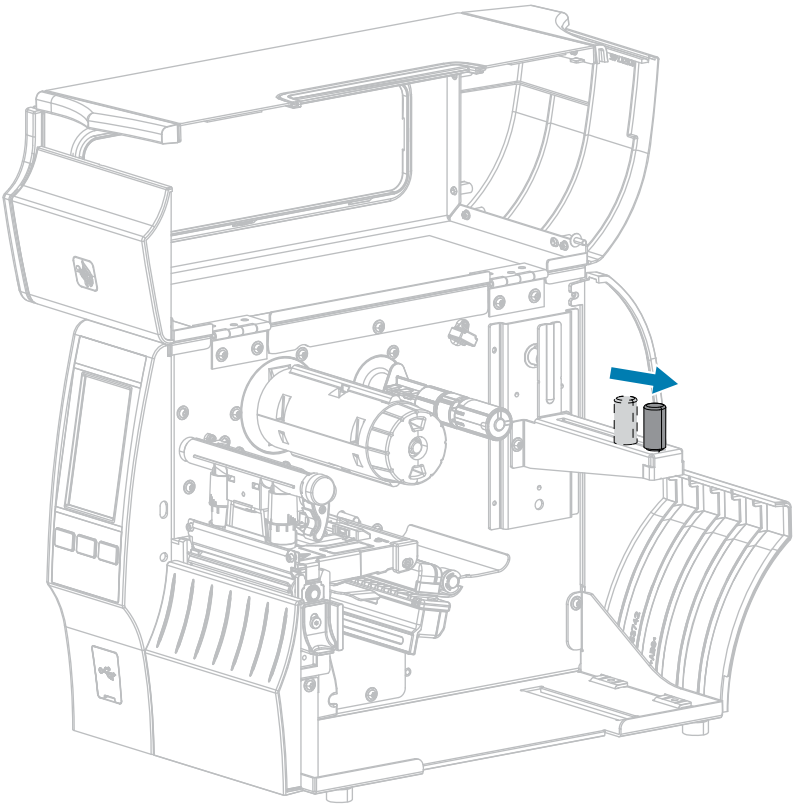

4. Insert roll or fanfold media into the printer. The media loading path is the same for both roll and fanfold media, so this is the only step that will be different.

Type of media	Instructions
Roll media 	Place the roll of media on the media supply hanger. Push the roll as far back as it will go.
Fanfold media 	Fanfold media can be stored behind or under the printer. Depending on where the media is stored, feed the media either from behind or through the bottom access slot, then drape it over the media supply hanger.

Rear Feed	Bottom Feed
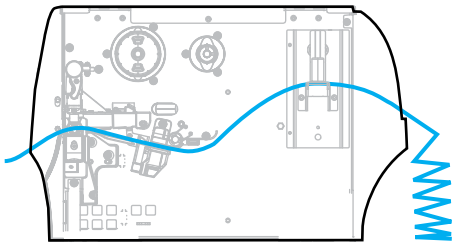	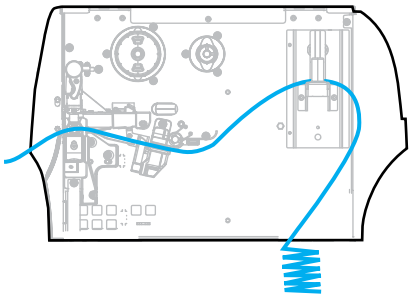

5. Which collection method are you using? (See Determining the Media Handling Method on page 33.)

If using...	Then...
Tear Off 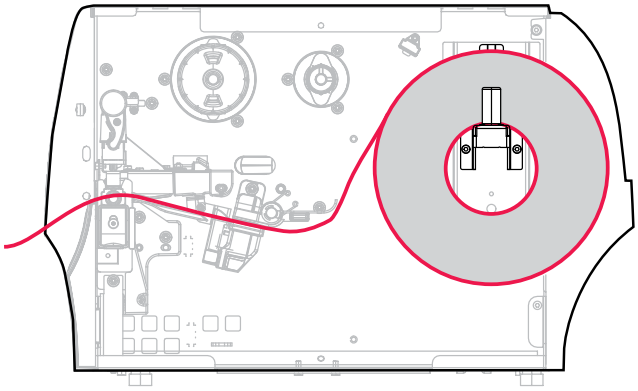	Continue with Using Tear-Off Mode on page 40.
Peel Off (with or without liner take-up) 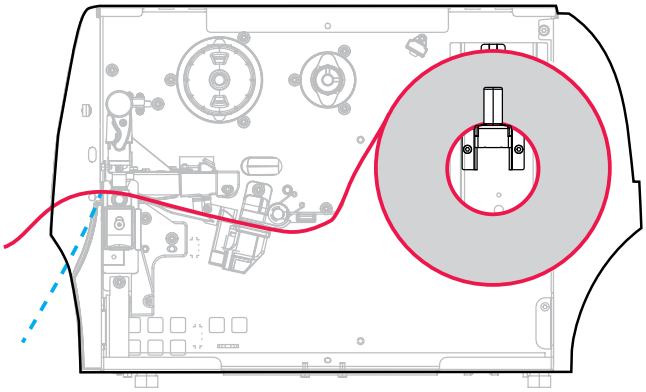	Continue with Using Peel-Off Mode (with or without Liner Take-Up) on page 44.
Rewind 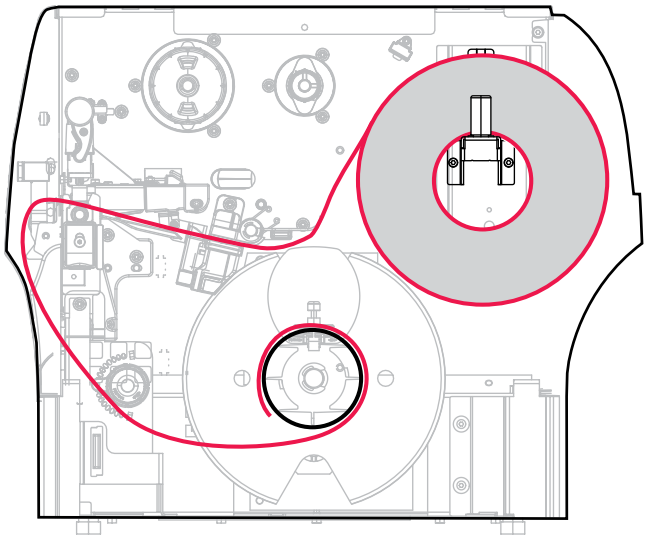	Continue with Using Rewind Mode on page 54.

If using...	Then...
Cutter or Delayed Cut 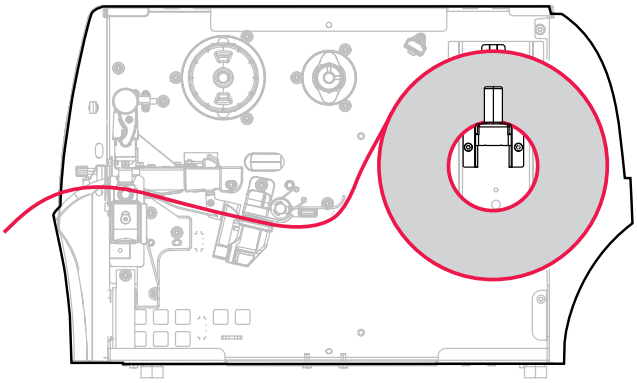	Continue with Using Cutter Mode or Delayed Cut Mode on page 62.
Linerless Cut or Delayed Linerless Cut 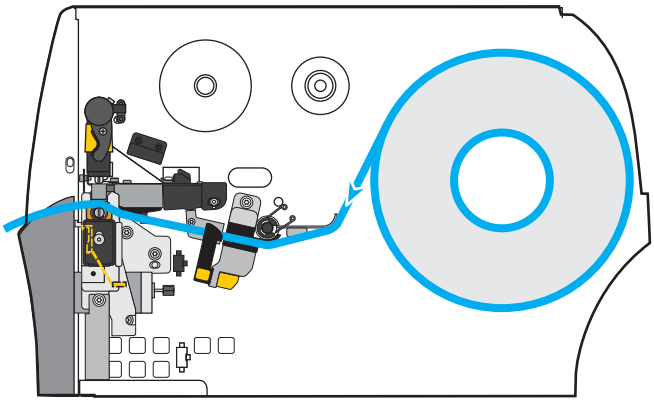	Continue with Using Linerless Cut Mode on page 66.

Using Tear-Off Mode

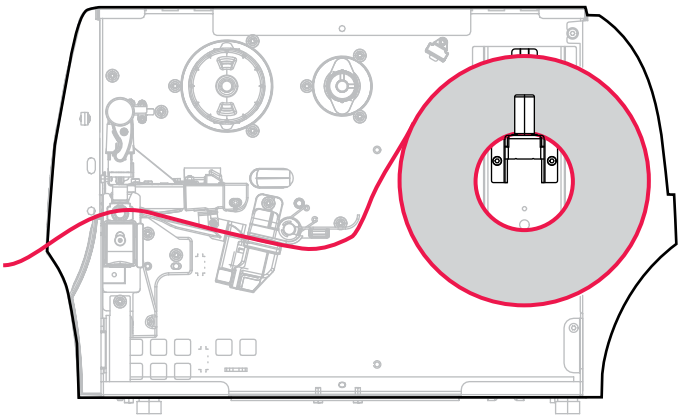

1. If you have not already done so, follow the instructions in the section Inserting the Media into the Printer on page 36.
2. Open the printhead assembly by rotating the printhead-open lever upward.

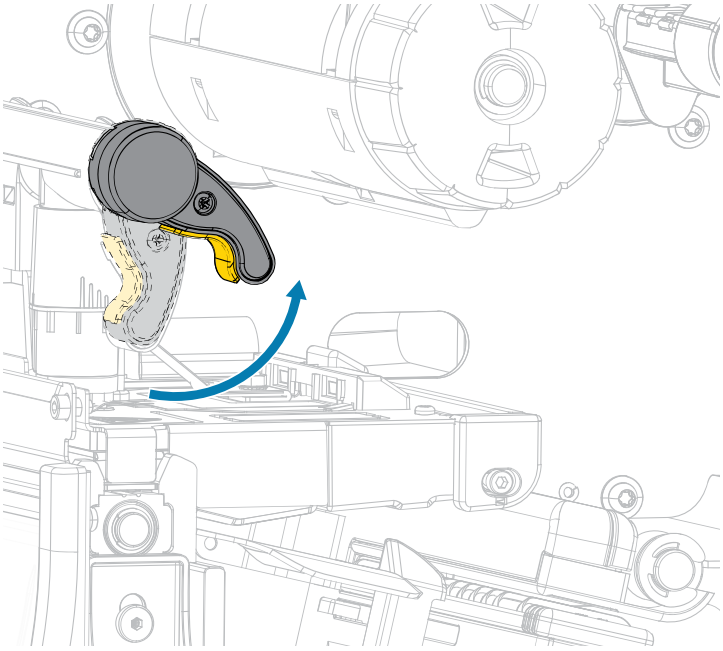

3. Slide the media guide all the way out.

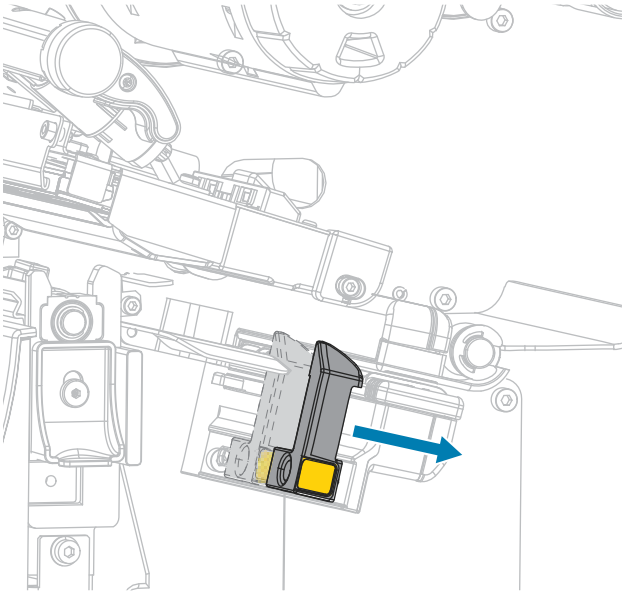

CAUTION: HOT SURFACE: The printhead may be hot and could cause severe burns. Allow the printhead to cool.

4. From the media hanger (1), feed the media under the dancer assembly (2), through the media sensor (3), and under the printhead assembly (4). Slide the media back until it touches the inside back wall of the media sensor.

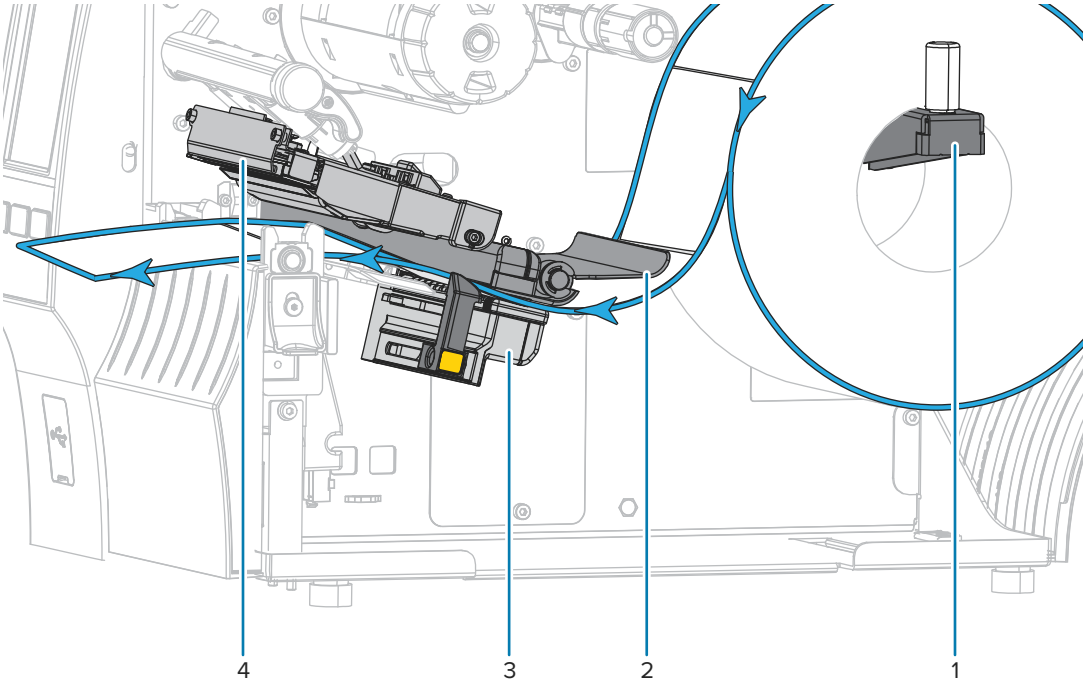

5. Slide in the media guide until it just touches the edge of the media.

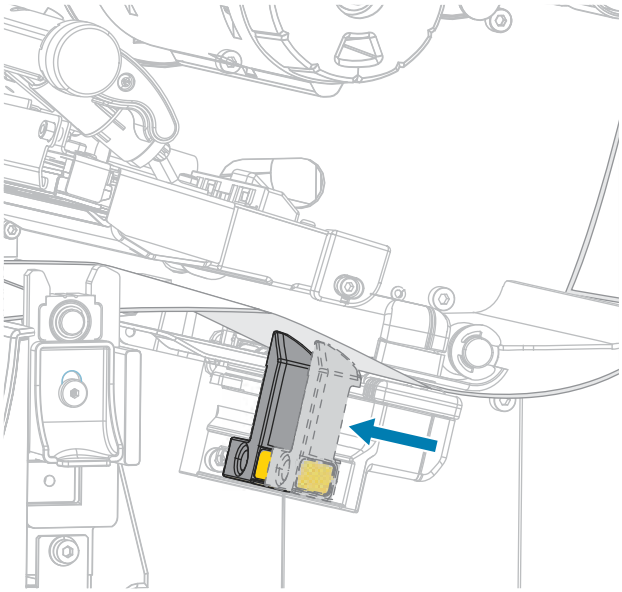

6. Does the media that you are using require ribbon for printing? If you are not sure, see Ribbon on page 11.

If using...	Then...
Direct Thermal media (no ribbon needed)	Continue with step 7 on page 42.
Thermal Transfer media (ribbon needed)	If you have not already done so, load ribbon in the printer using the instructions in Loading the Ribbon on page 73, then continue on to step 7 on page 42.

7. Rotate the printhead-open lever downward until it locks the printhead in place.

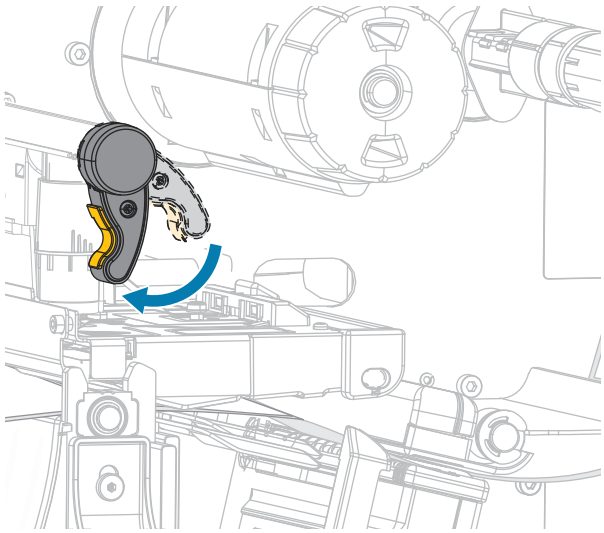

8. Close the media door.

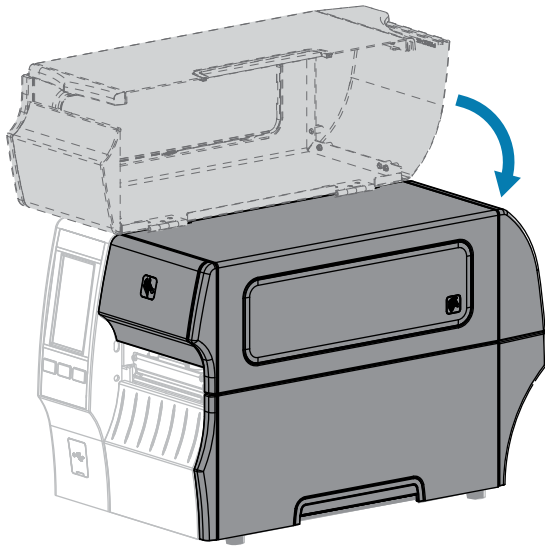

9. Set the printer to the appropriate collection method that is compatible with your printer (see Print Menu > Label Position > Collection Method).
10. Press **PAUSE** to exit pause mode and enable printing.

    The printer may perform a label calibration or feed a label, depending on your settings.
11. For optimal results, calibrate the printer (see Calibrating the Ribbon and Media Sensors on page 131).
12. Verify that your printer can print a configuration label by holding both the **FEED** and **CANCEL** keys for 2 seconds.

Media loading in Tear-Off mode is complete.

Using Peel-Off Mode (with or without Liner Take-Up)

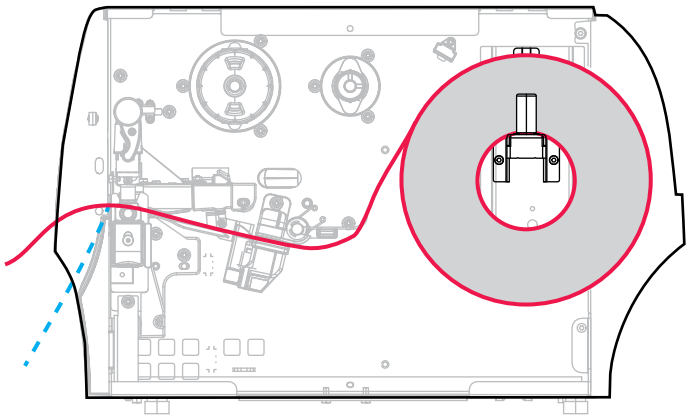

1. If you have not already done so, follow the instructions in the section Inserting the Media into the Printer on page 36.
2. Open the printhead assembly by rotating the printhead-open lever upward.

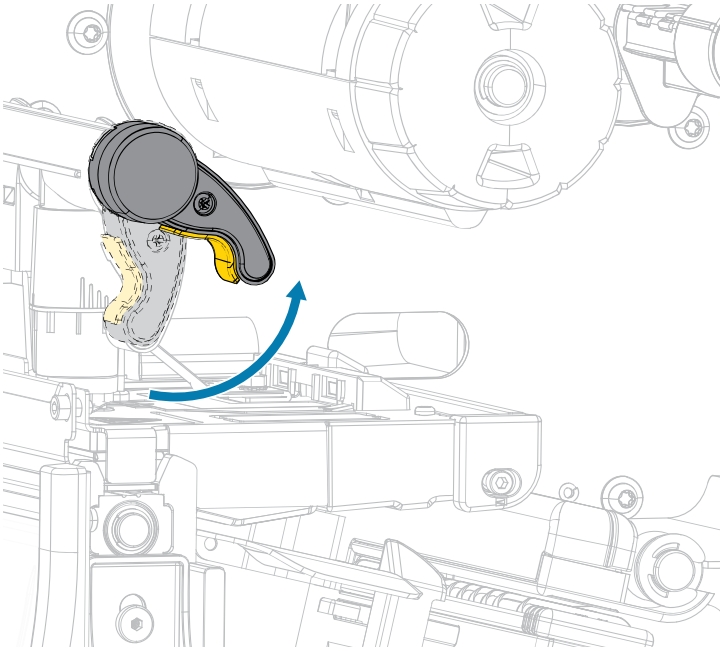

3. Slide the media guide all the way out.

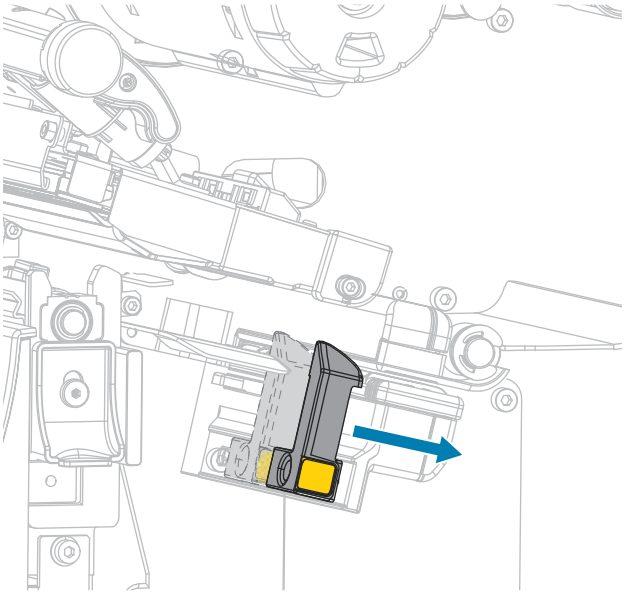

4. Push down the peel-off mechanism release lever to open the peel assembly.

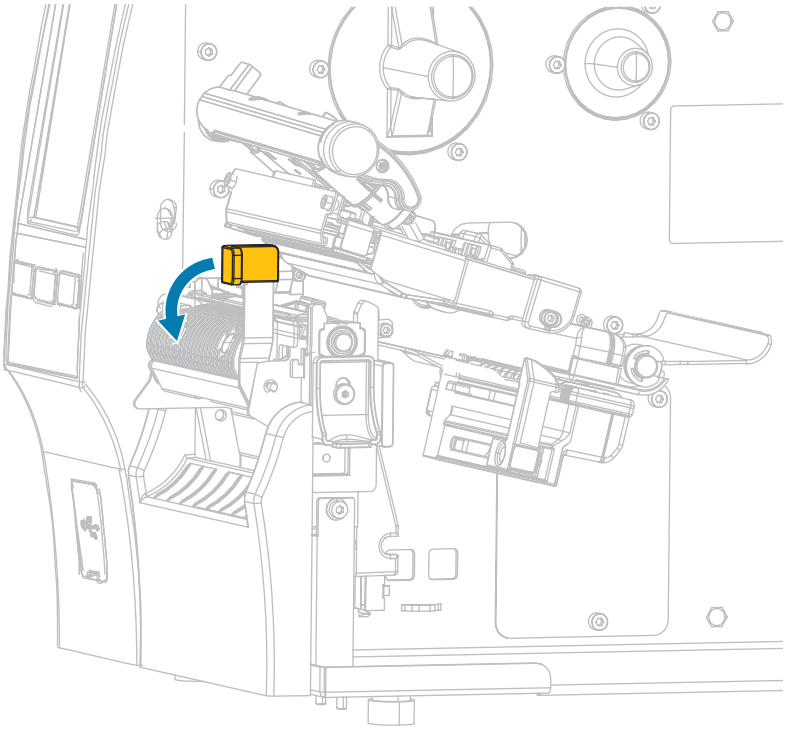

CAUTION: HOT SURFACE: The printhead may be hot and could cause severe burns. Allow the printhead to cool.

5. From the media hanger (1), feed the media under the dancer assembly (2), through the media sensor (3), and under the printhead assembly (4). Slide the media back until it touches the inside back wall of the media sensor.

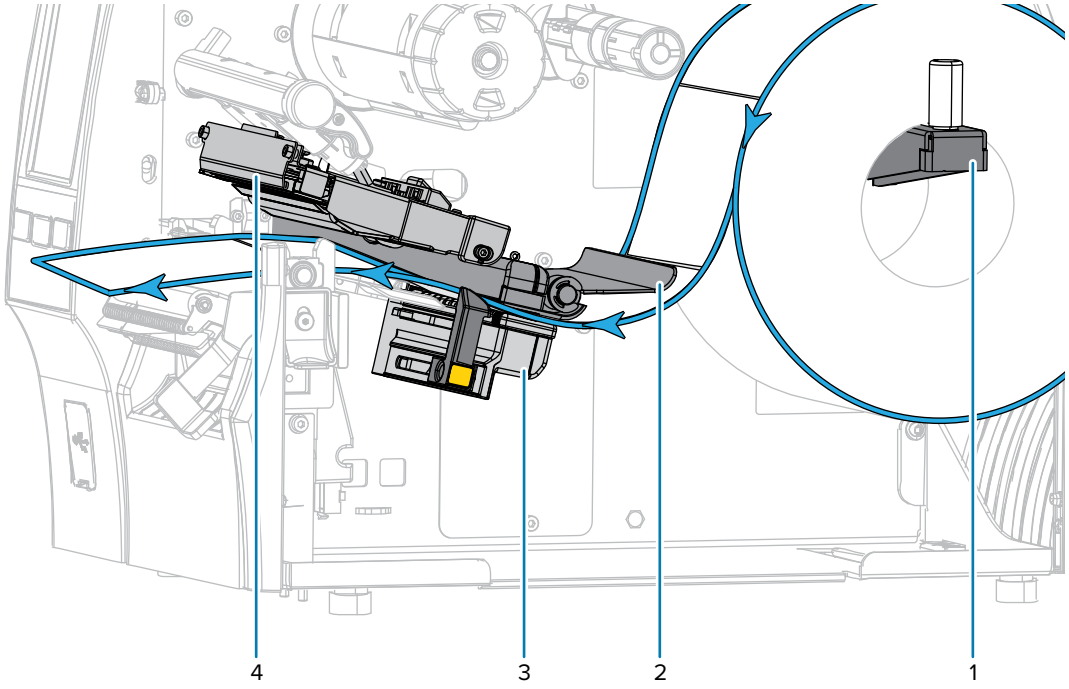

6. Extend approximately 18 in. (500 mm) of media out of the printer. Remove and discard the labels from this exposed media, leaving just the liner.

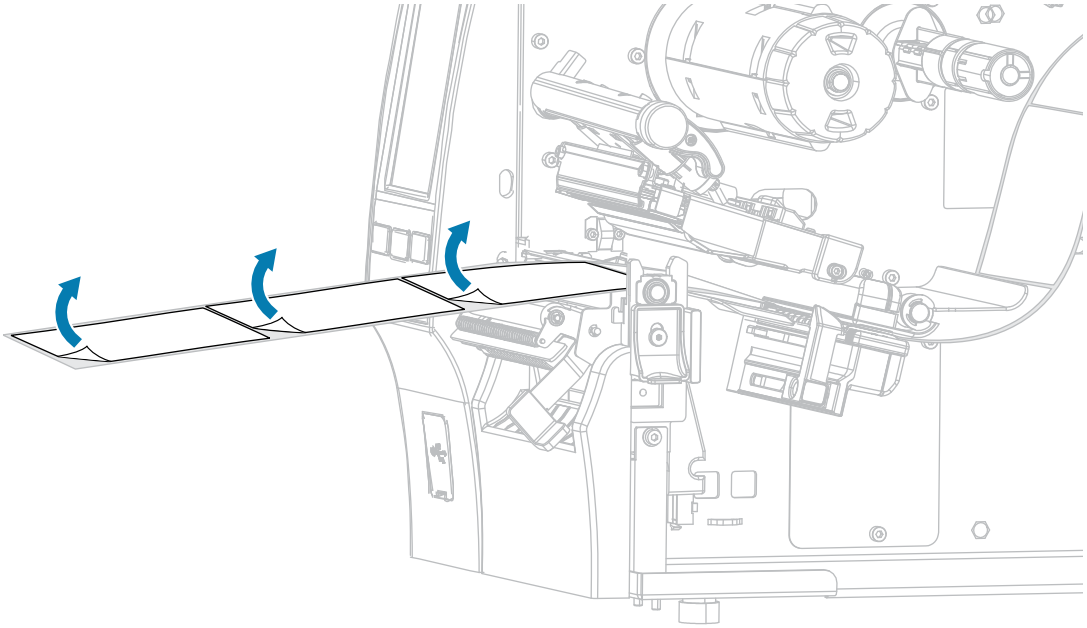

7. Feed the liner behind the peel assembly. Make sure that the end of the liner falls outside of the printer.

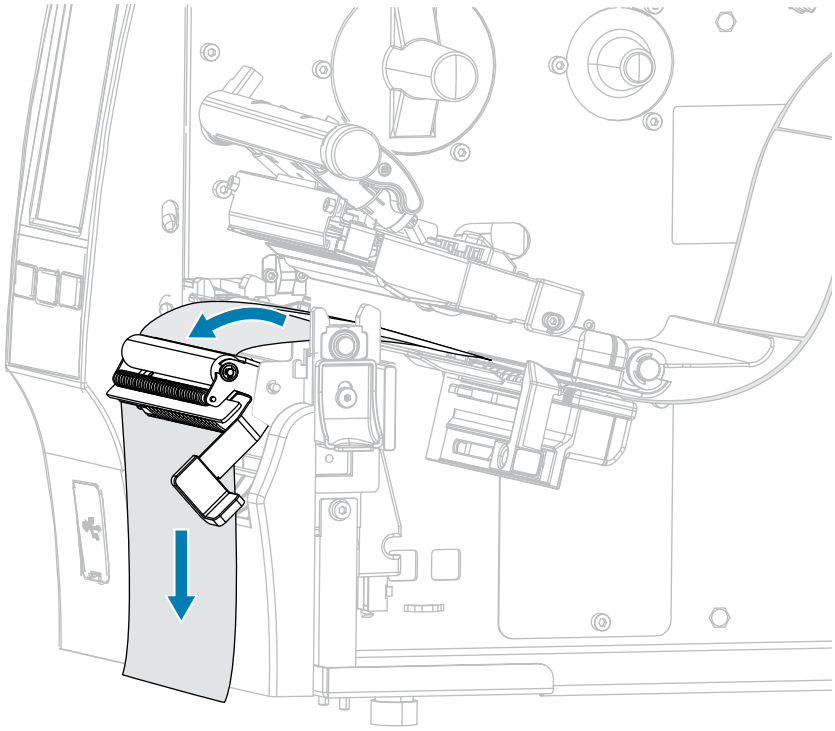

8. Complete this step only if you want to use Peel-Off mode with Liner Take-Up. Your printer must have the Liner Take-Up option or the Rewind option installed. Follow the instructions for your printer option. (If you are not using Liner Take-Up, skip this step and proceed to step 9 on page 51.)

<table>
<tr><th>Rewind Option</th><th>Liner Take-Up Option</th></tr>
<tr><td colspan="2">a. For both the Rewind option and the Liner Take-Up option: Thread the liner into the slot below the peel assembly.
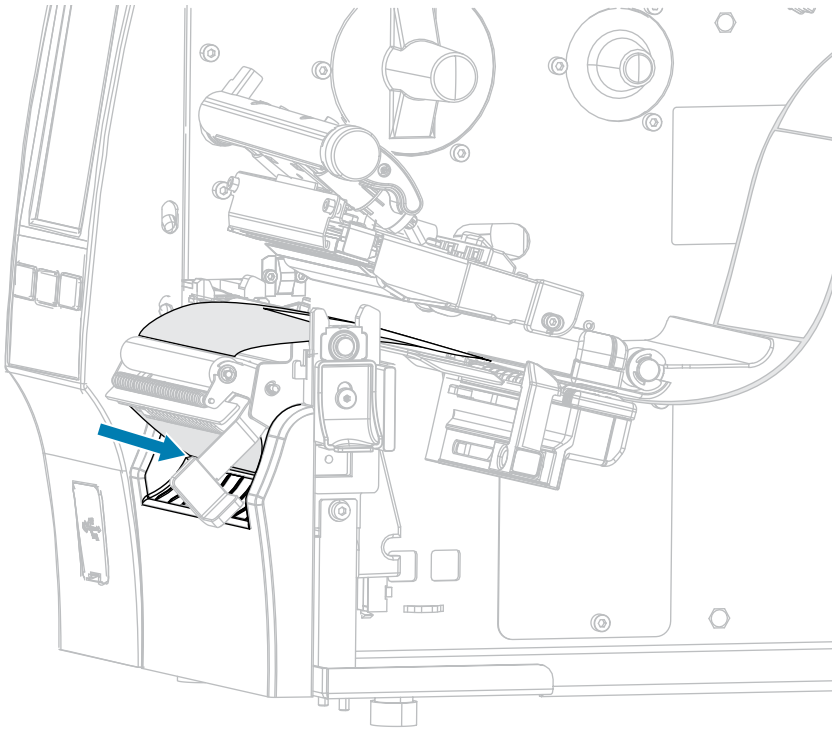</td></tr>
<tr><td>b. Feed the liner under the media alignment roller.
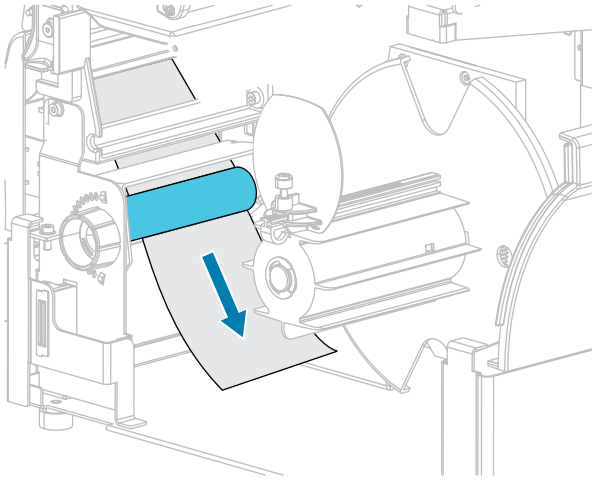</td><td>b. Slide the liner into the slot in the liner take-up spindle.
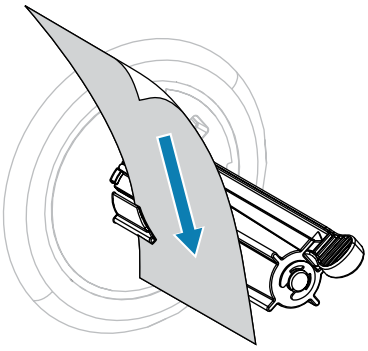</td></tr>
</table>

Rewind Option	Liner Take-Up Option
c. Loosen the thumbscrew on the rewind media guide. 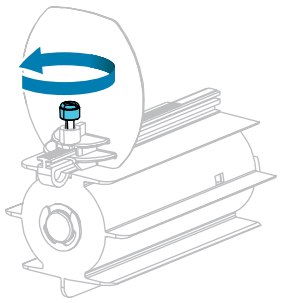	c. Push the liner back until it touches the back plate of the liner take-up spindle assembly. 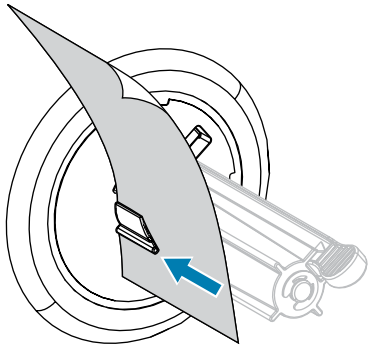
d. Slide the rewind media guide all the way out, and then fold it down. 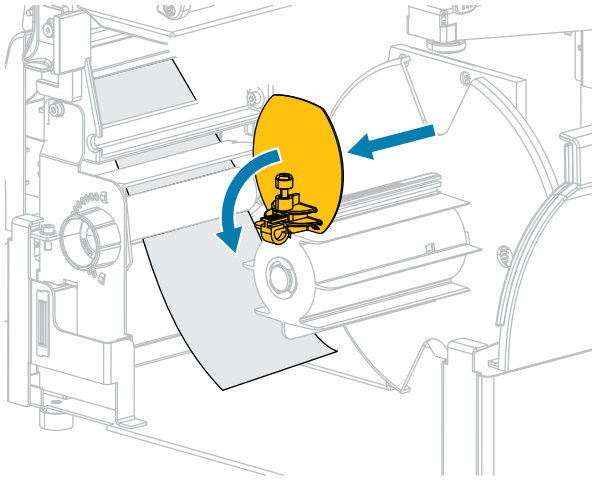	d. Wrap the liner around the liner take-up spindle and turn the spindle counterclockwise to tighten the liner. 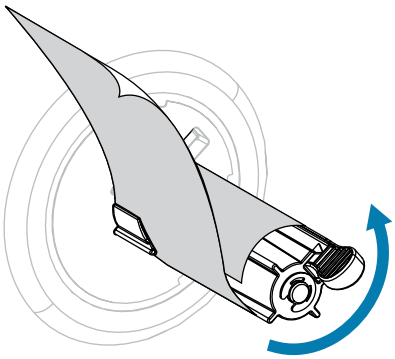 For the Liner Take-Up option, loading of the liner is complete. Continue on to step 9 on page 51.
e. Slide an empty core onto the rewind spindle. 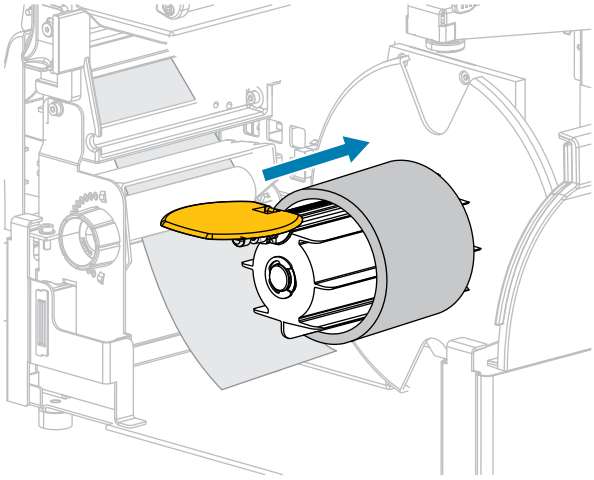	

Rewind Option	Liner Take-Up Option
f. Wrap the liner around the core as shown, and then turn the rewind spindle to tighten the media. Ensure that the edge of the media is flush against the backplate of the rewind spindle. 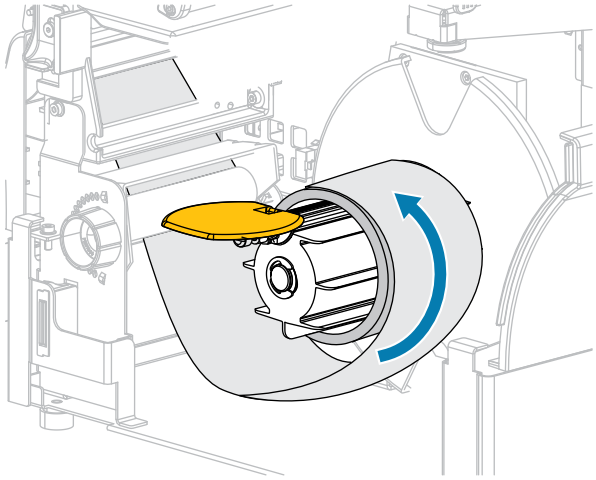	
g. Fold up the rewind media guide, and then slide it in until it touches the liner. 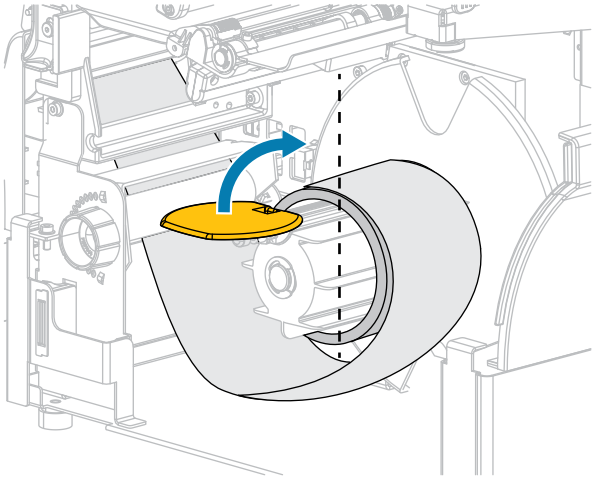	

Rewind Option	Liner Take-Up Option
h. Tighten the thumbscrew on the rewind media guide. 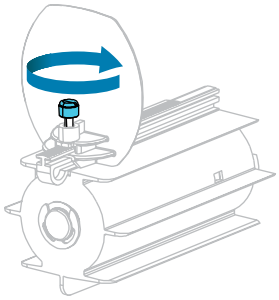 Loading of the liner is complete. Continue with step 9 on page 51.	

9. Close the peel assembly using the peel-off mechanism release lever.

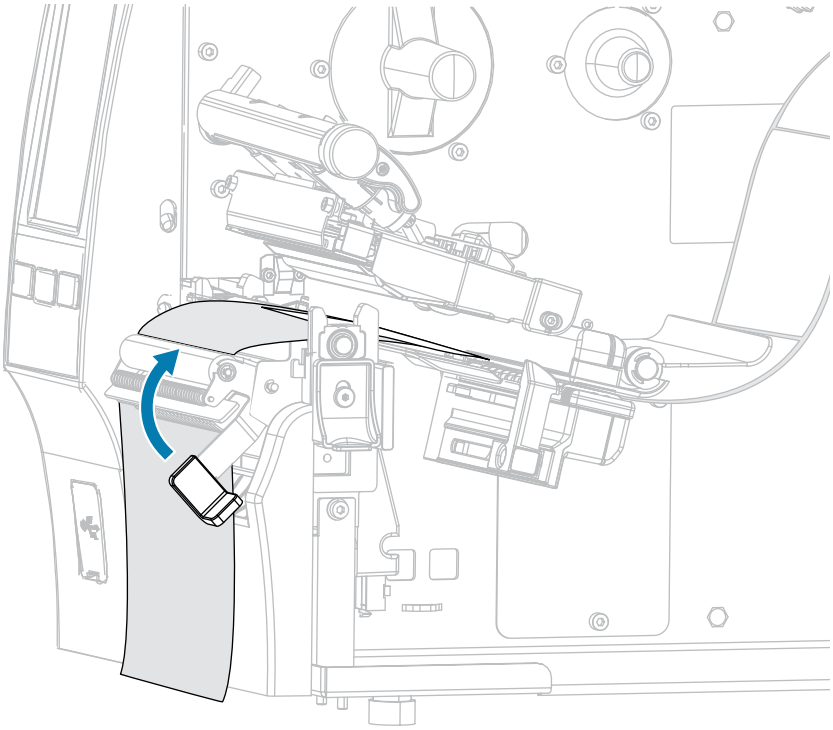

10. Slide in the media guide until it just touches the edge of the media.

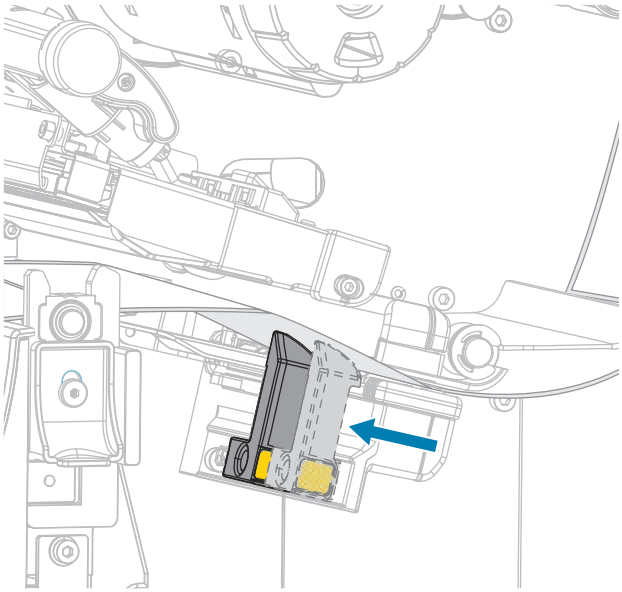

11. Does the media that you are using require ribbon for printing? If you are not sure, see Ribbon on page 11.

If using...	Then...
Direct Thermal media (no ribbon needed)	Continue with step 12 on page 52.
Thermal Transfer media (ribbon needed)	**a.** If you have not already done so, load ribbon in the printer. (See Loading the Ribbon on page 73.) **b.** Continue with step 12 on page 52.

12. Rotate the printhead-open lever downward until it locks the printhead in place.

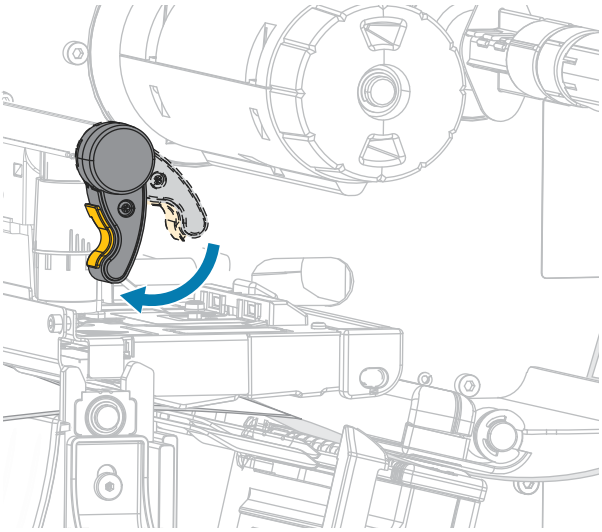

13. Close the media door.

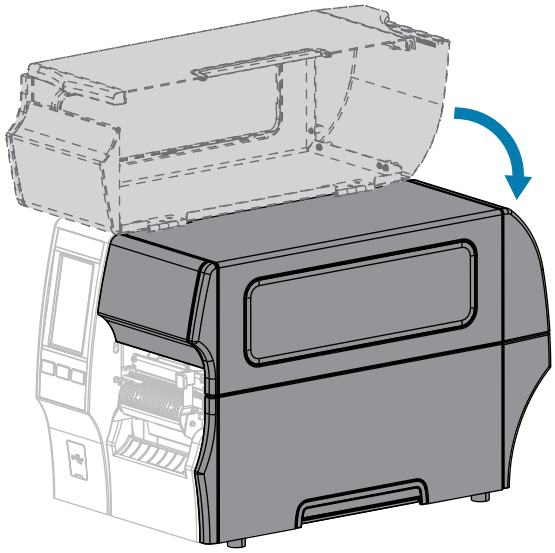

14. Set the printer to the appropriate collection method (see Print > Label Position > Collection Method).
15. Press **PAUSE** to exit pause mode and enable printing.

    The printer may perform a label calibration or feed a label, depending on your settings.
16. For optimal results, calibrate the printer (see Calibrating the Ribbon and Media Sensors on page 131).
17. Verify that your printer can print a configuration label by holding both the **FEED** and **CANCEL** keys for 2 seconds.

Media loading in Peel-Off mode is complete.

Using Rewind Mode

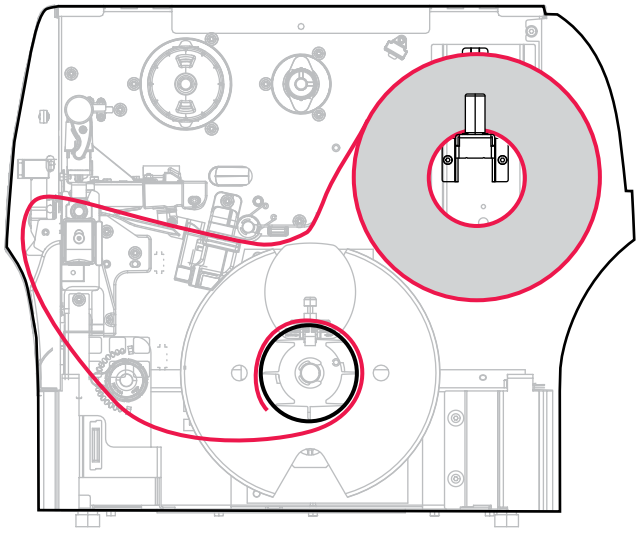

1. If you have not already done so, follow the instructions in Inserting the Media into the Printer on page 36.
2. Open the printhead assembly by rotating the printhead-open lever upward.

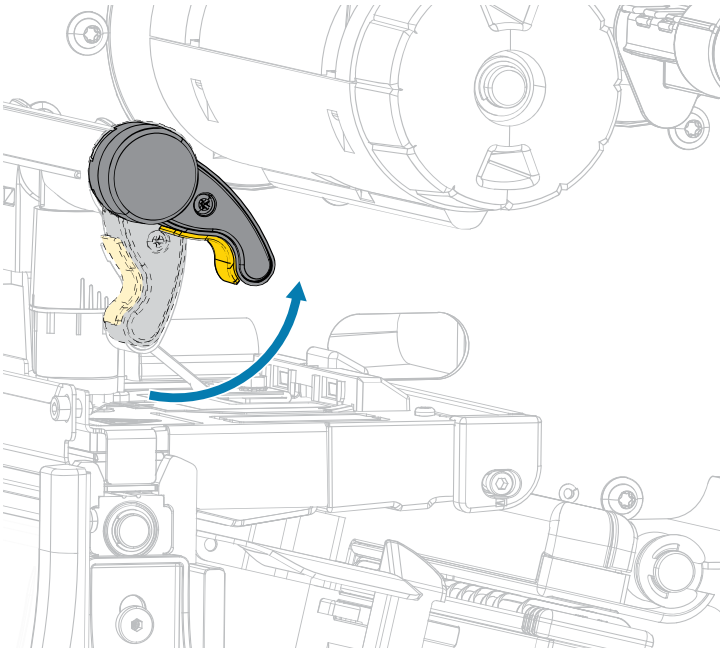

3. Slide the media guide all the way out.

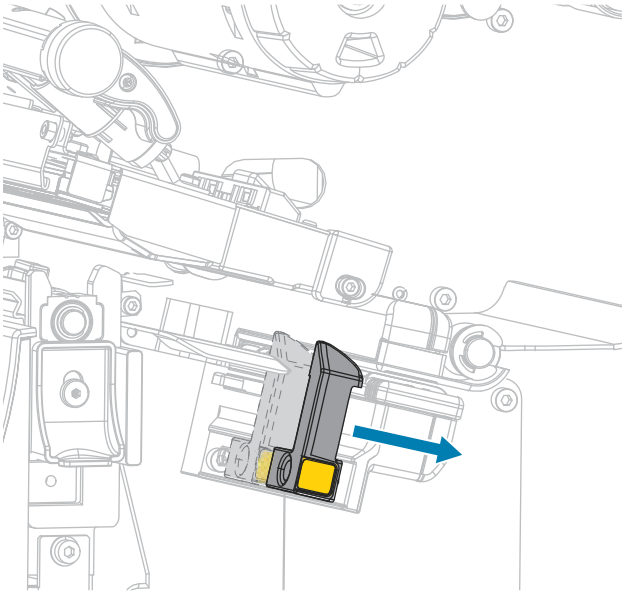

CAUTION: HOT SURFACE: The printhead may be hot and could cause severe burns. Allow the printhead to cool.

4. From the media hanger (1), feed the media under the dancer assembly (2), through the media sensor (3), and under the printhead assembly (4). Slide the media back until it touches the inside back wall of the media sensor.

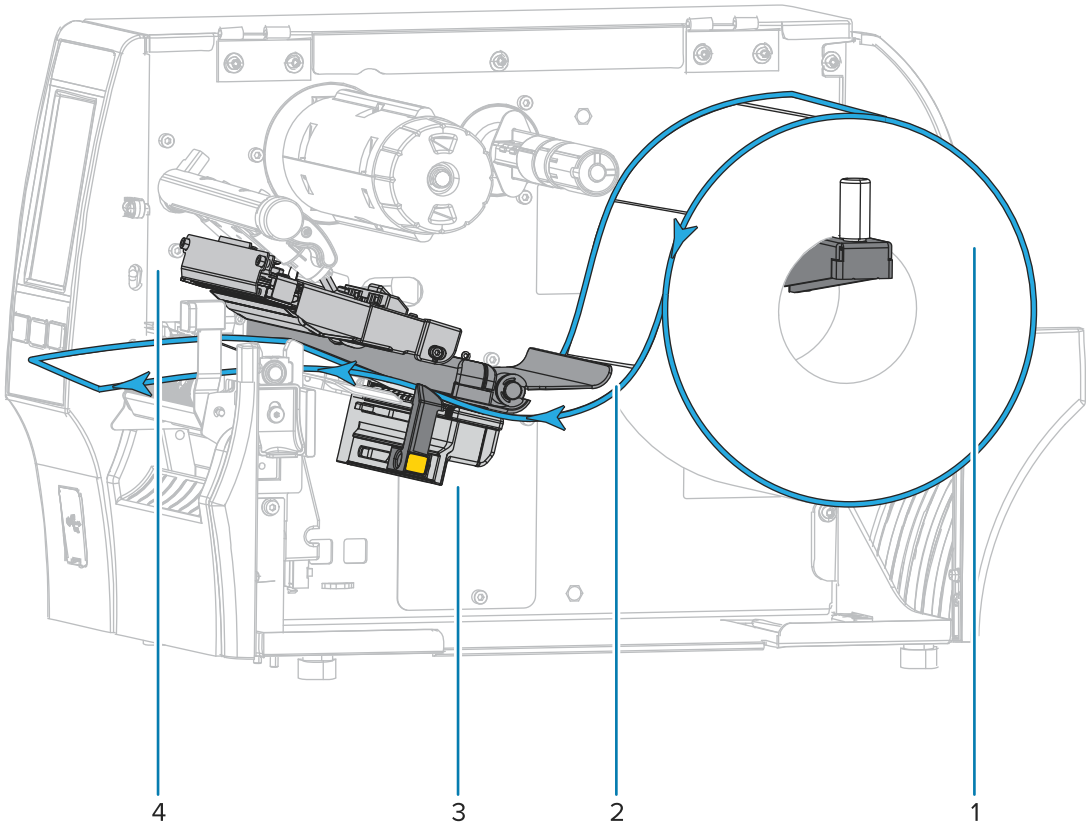

5. Extend approximately 18 in. (500 mm) of media out of the printer.

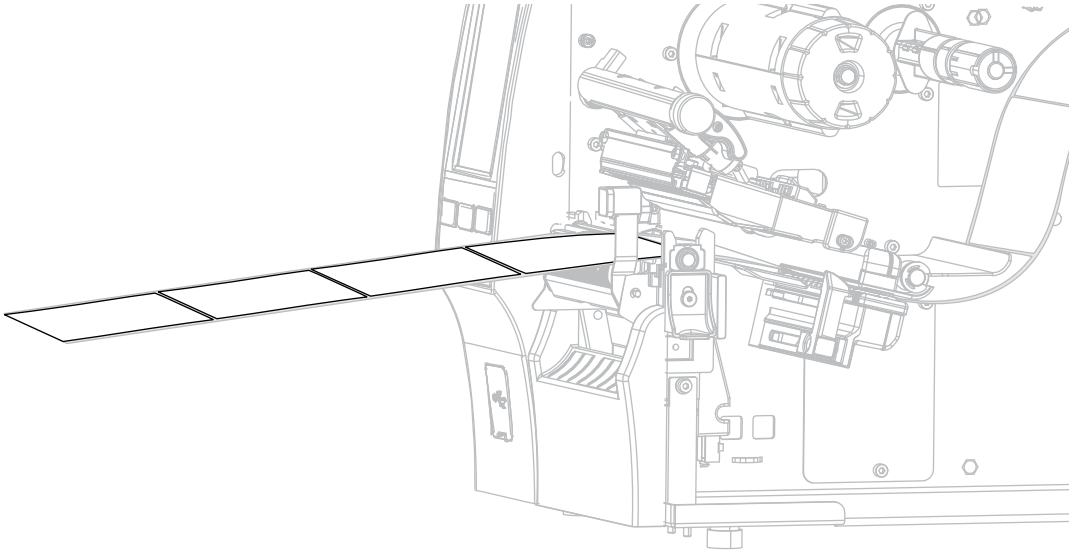

6. Feed the media over the peel assembly.

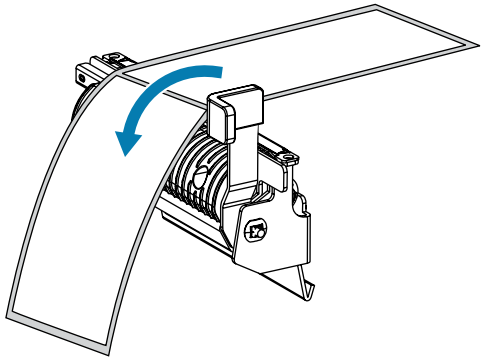

7. Thread the media into the slot below the peel assembly.

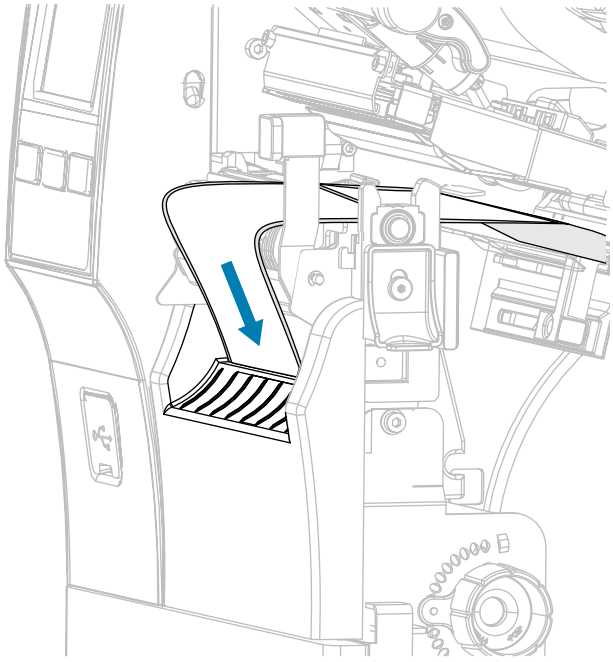

8. Feed the media under the media alignment roller.

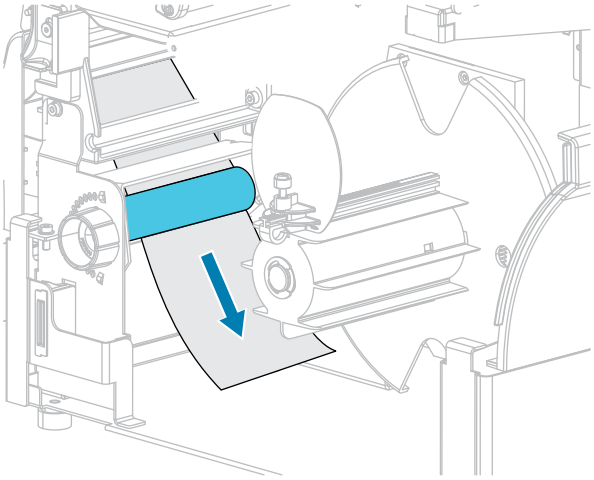

9. Loosen the thumbscrew on the rewind media guide.

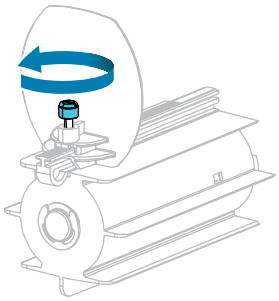

10. Slide the rewind media guide all the way out, and then fold it down.

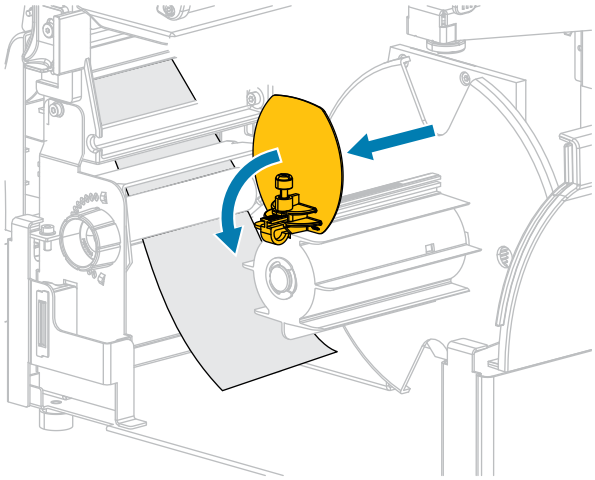

11. Slide an empty core onto the rewind spindle.

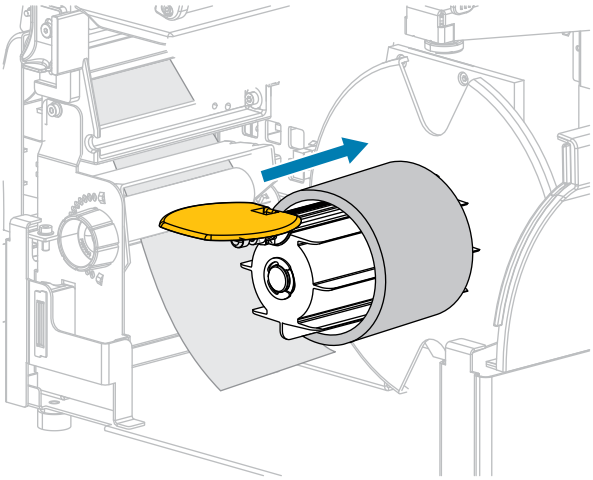

12. Wrap the media around the core as shown and turn the rewind spindle to tighten the media. Ensure that the edge of the media is flush against the backplate of the rewind spindle.

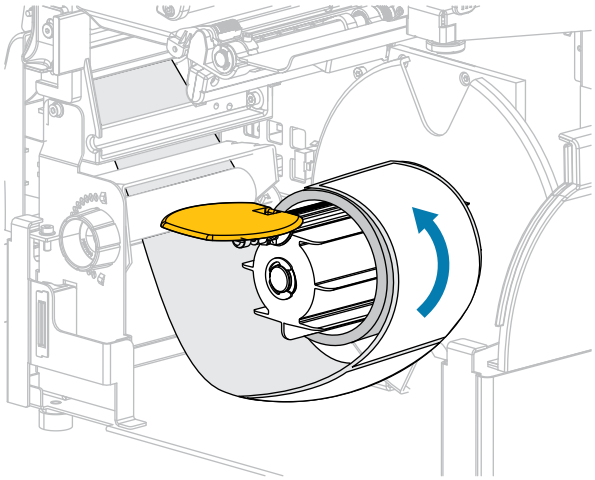

13. Fold up the rewind media guide, and then slide it in until it touches the media.

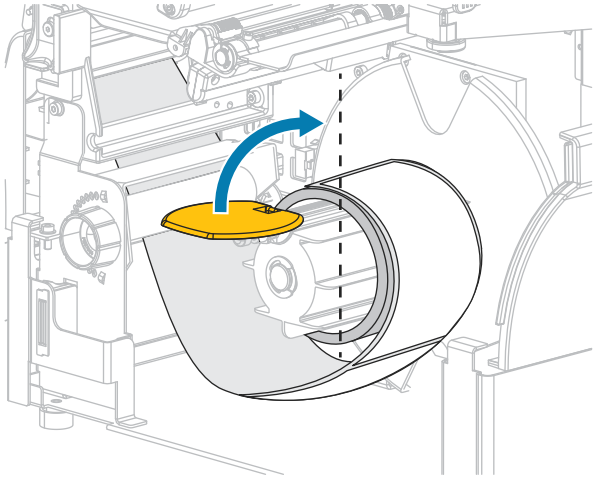

14. Tighten the thumbscrew on the rewind media guide.

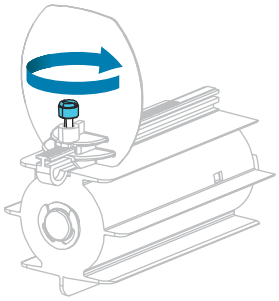

15. Slide in the media guide until it just touches the edge of the media.

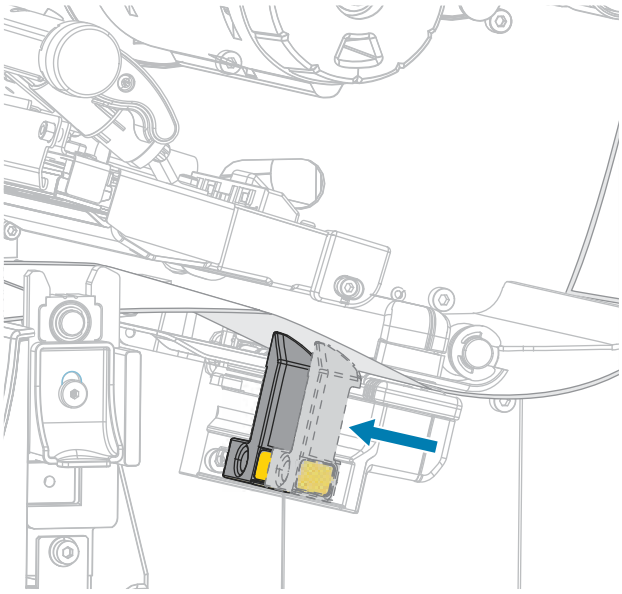

16. Does the media that you are using require ribbon for printing? If you are not sure, see Ribbon on page 11.

If using...	Then...
Direct Thermal media (no ribbon needed)	Continue with step 17 on page 60.
Thermal Transfer media (ribbon needed)	**a.** If you have not already done so, load ribbon in the printer. (See Loading the Ribbon on page 73.) **b.** Continue with step 17 on page 60.

17. Rotate the printhead-open lever downward until it locks the printhead in place.

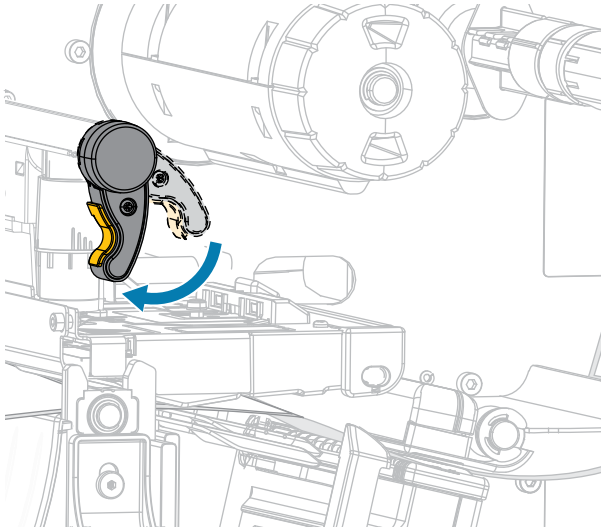

18. Close the media door and the rewind base door.

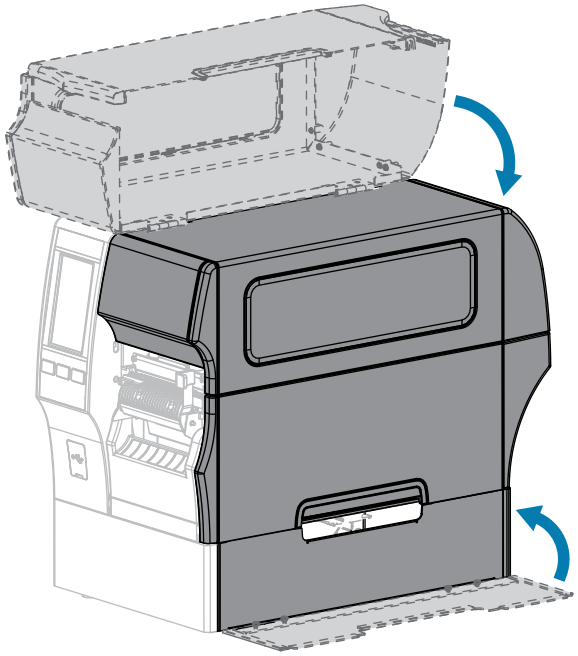

19. Set the printer to Rewind mode. (For more information, see Print > Label Position > Collection Method.)

20. Press **PAUSE** to exit pause mode and enable printing.

    The printer may perform a label calibration or feed a label, depending on your settings.

21. For optimal results, calibrate the printer. (See Calibrating the Ribbon and Media Sensors on page 131.)

22. Verify that your printer can print a configuration label by holding both the **FEED** and **CANCEL** keys for 2 seconds.

Media loading in Rewind mode is complete.

Using Cutter Mode or Delayed Cut Mode

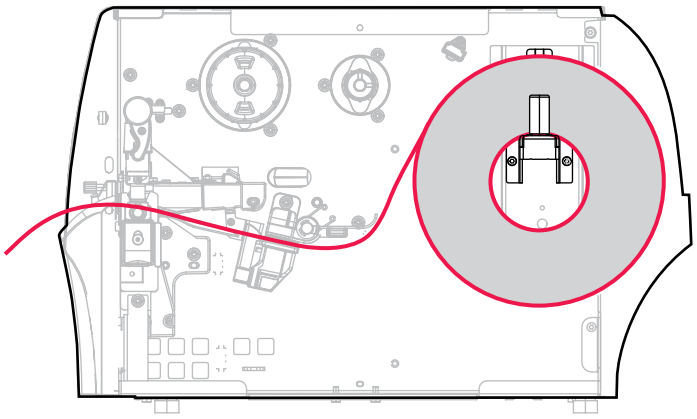

1. If you have not already done so, follow the instructions in Inserting the Media into the Printer on page 36.
2. Open the printhead assembly by rotating the printhead-open lever upward.

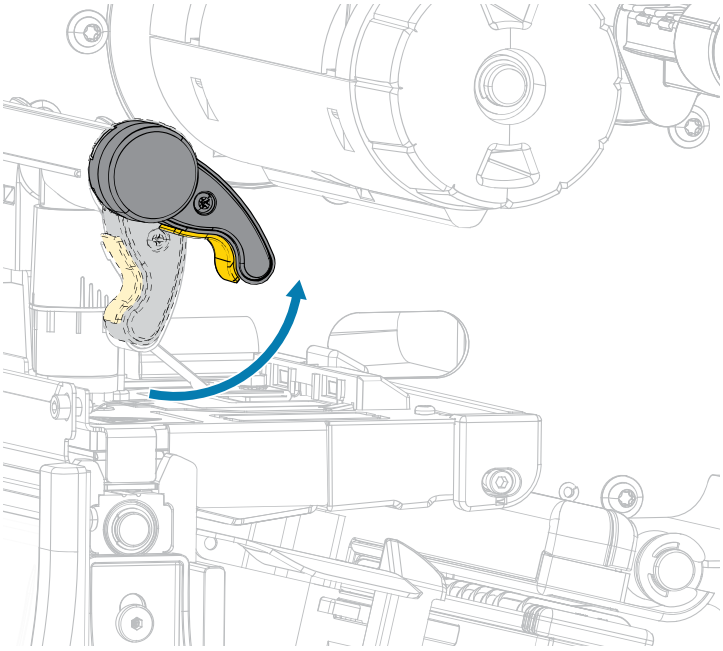

3. Slide the media guide all the way out.

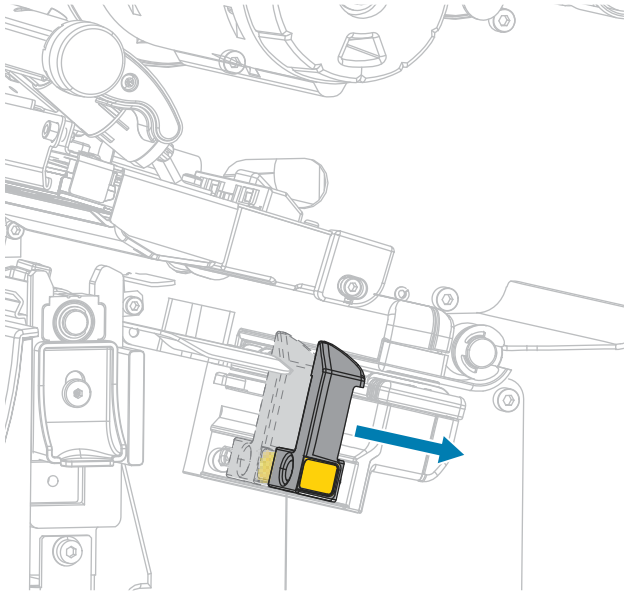

CAUTION: HOT SURFACE: The printhead may be hot and could cause severe burns. Allow the printhead to cool.

4. From the media hanger (1), feed the media under the dancer assembly (2), through the media sensor (3), and under the printhead assembly (4). Slide the media back until it touches the inside back wall of the media sensor.

CAUTION: The cutter blade is sharp. Do NOT touch or rub the blade with your fingers.

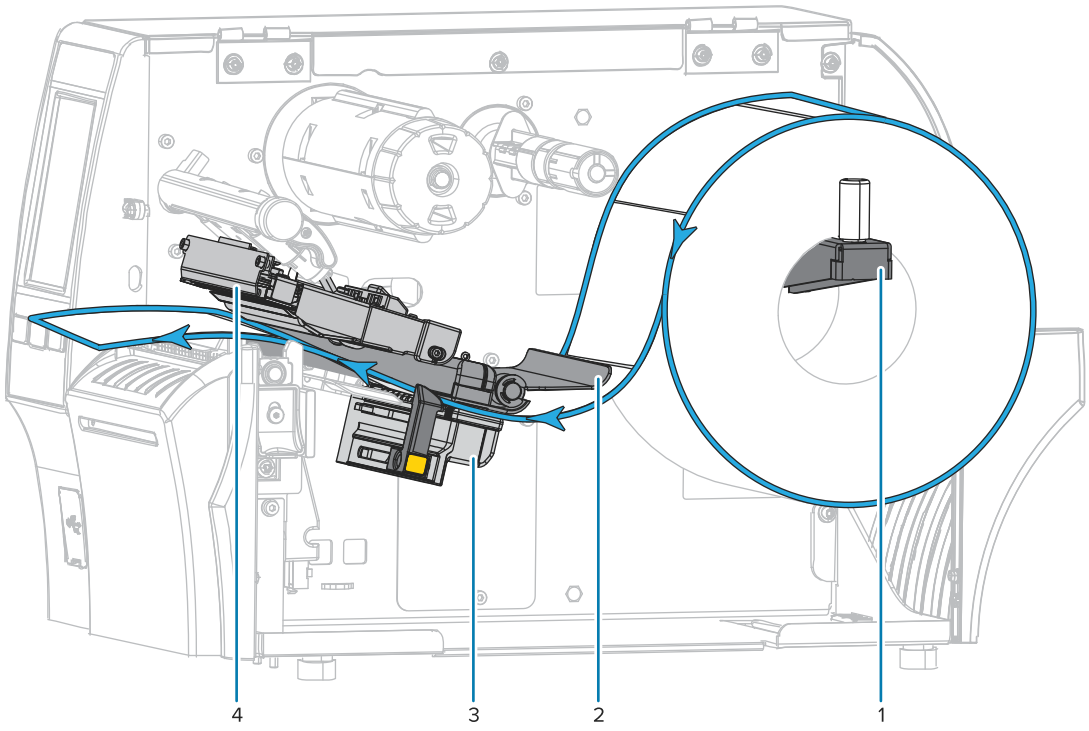

5. Feed the media through the cutter.

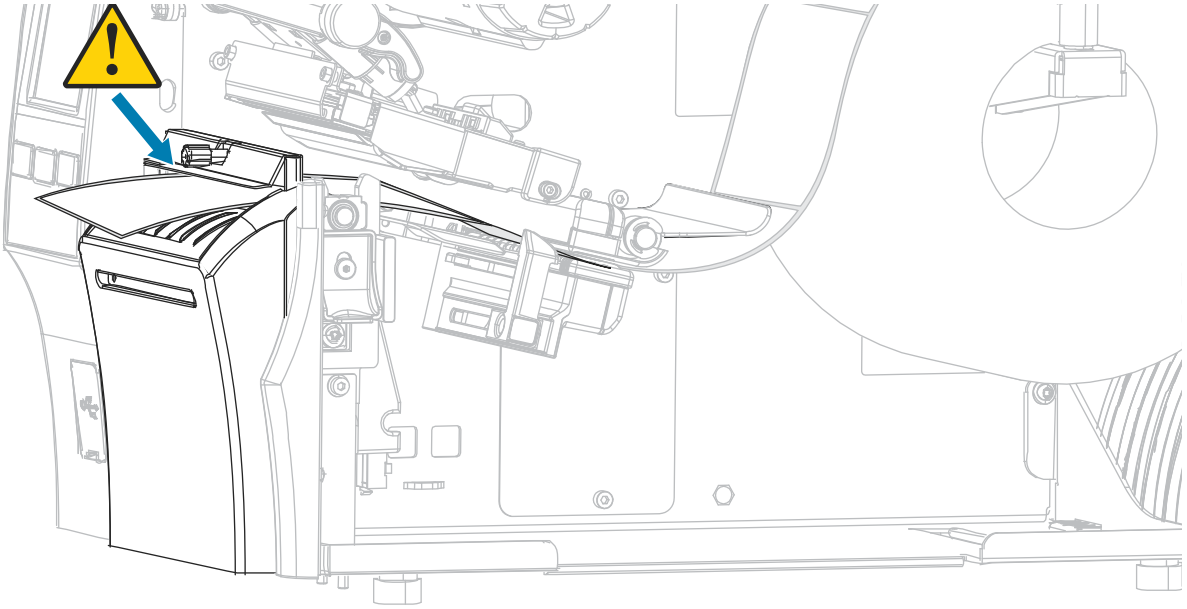

6. Slide in the media guide until it just touches the edge of the media.

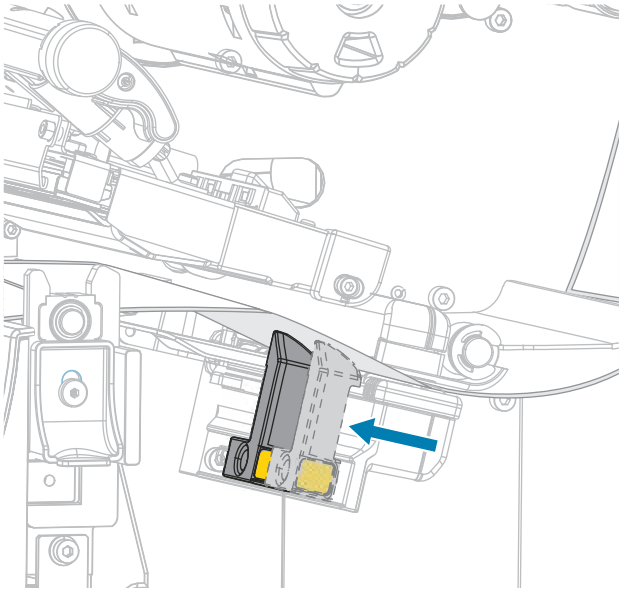

7. Does the media that you are using require ribbon for printing? If you are not sure, see Ribbon on page 11.

If using...	Then...
Direct Thermal media (no ribbon needed)	Continue with step 8 on page 65.
Thermal Transfer media (ribbon needed)	If you have not already done so, load ribbon in the printer. See Loading the Ribbon on page 73. Continue with step 8 on page 65.

8. Rotate the printhead-open lever downward until it locks the printhead in place.

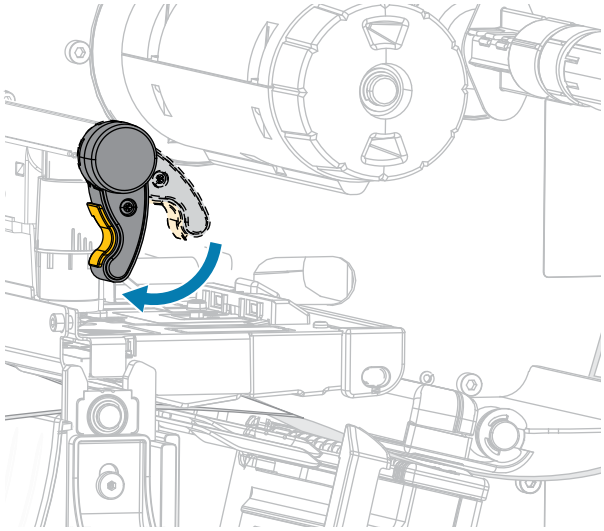

9. Close the media door.

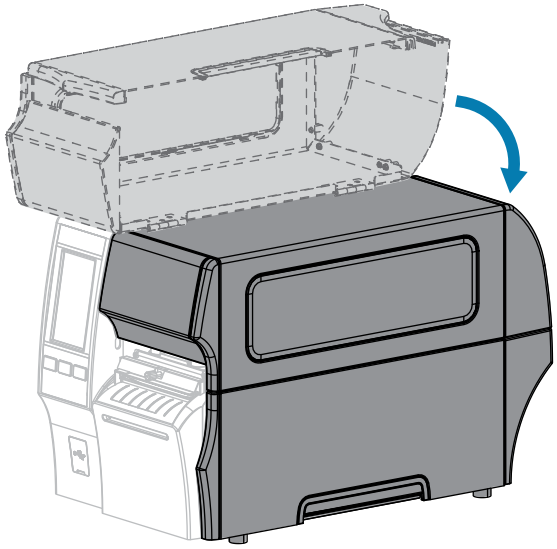

10. Set the printer to the appropriate collection method (for more information, see Print > Label Position > Collection Method).
11. Press **PAUSE** to exit pause mode and enable printing.

    The printer may perform a label calibration or feed a label, depending on your settings.
12. For optimal results, calibrate the printer (see Calibrating the Ribbon and Media Sensors on page 131).
13. Verify that your printer can print a configuration label by holding both the **FEED** and **CANCEL** keys for 2 seconds.

Media loading in Cutter mode is complete.

Using Linerless Cut Mode

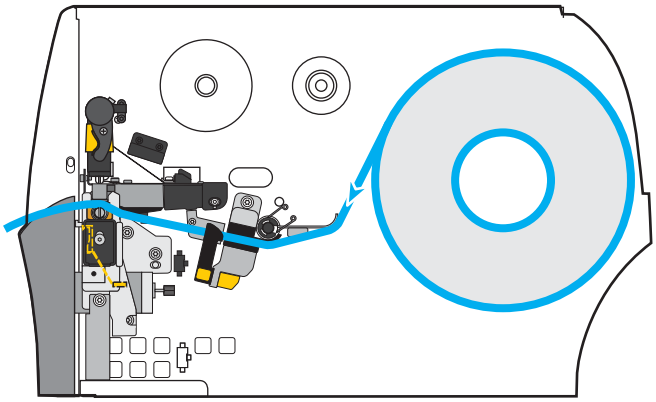

NOTE: Zebra recommends using Zebra ZeroLiner direct thermal linerless media.

1. If you have not already done so, follow the instructions in Inserting the Media into the Printer on page 36.
2. Open the printhead assembly by rotating the printhead-open lever upward.

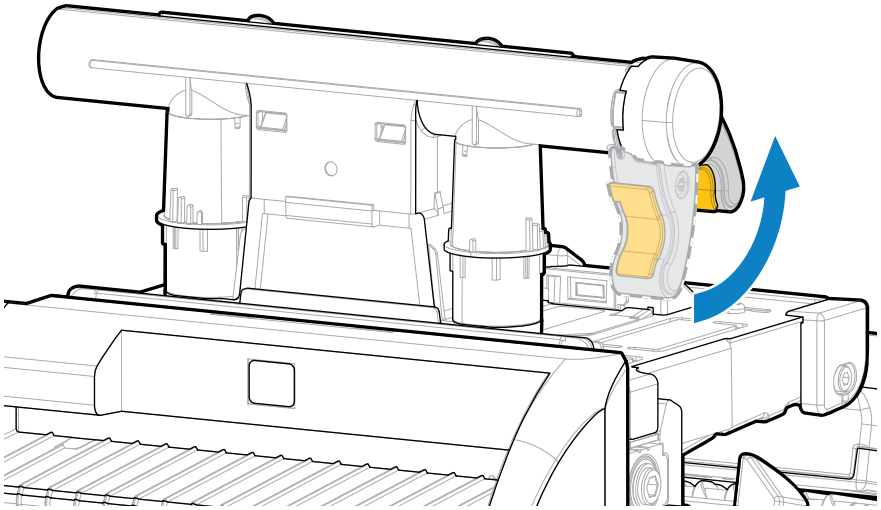

3. Slide the media guide all the way out.

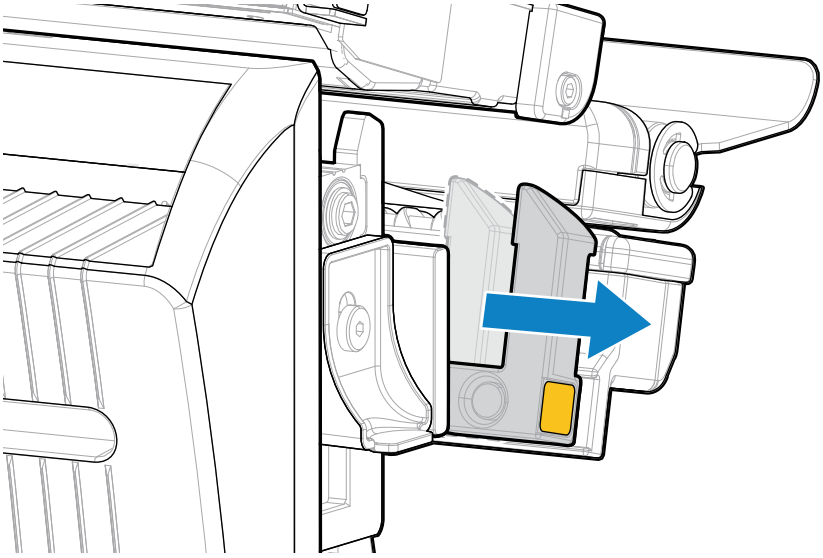

CAUTION: HOT SURFACE: The printhead may be hot and could cause severe burns. Allow the printhead to cool.

4. Press down on the cutter release lever, and then pivot the cutter forward.

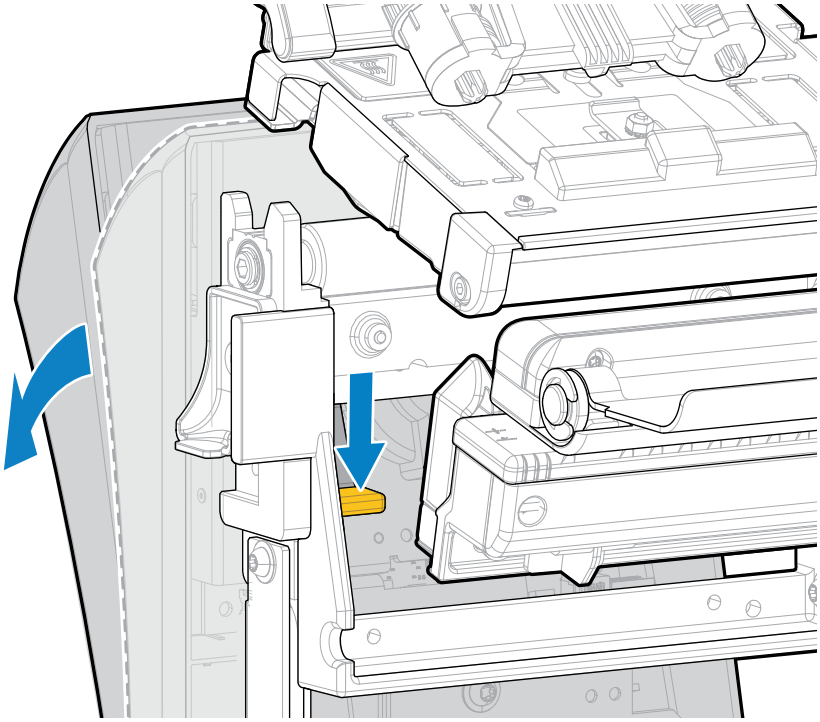

5. Load the media as shown.

a) From the media hanger (1), feed the media under the dancer assembly (2), through the media sensor (3), under the printhead assembly (4), and through the cutter (5).

CAUTION: The cutter blade is sharp. Do NOT touch or rub the blade with your fingers.

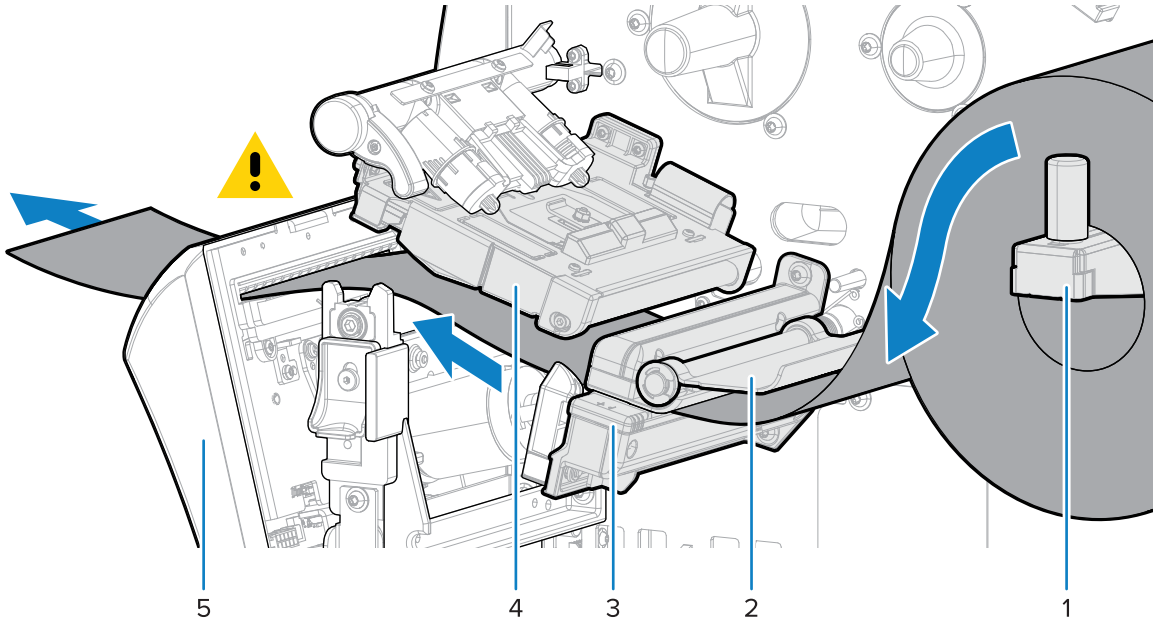

b) Slide the media back until it touches the inside back wall of the media sensor.

c) Pivot the cutter back, and then apply pressure to the gold square on the front of the cutter to secure the cutter back into place.

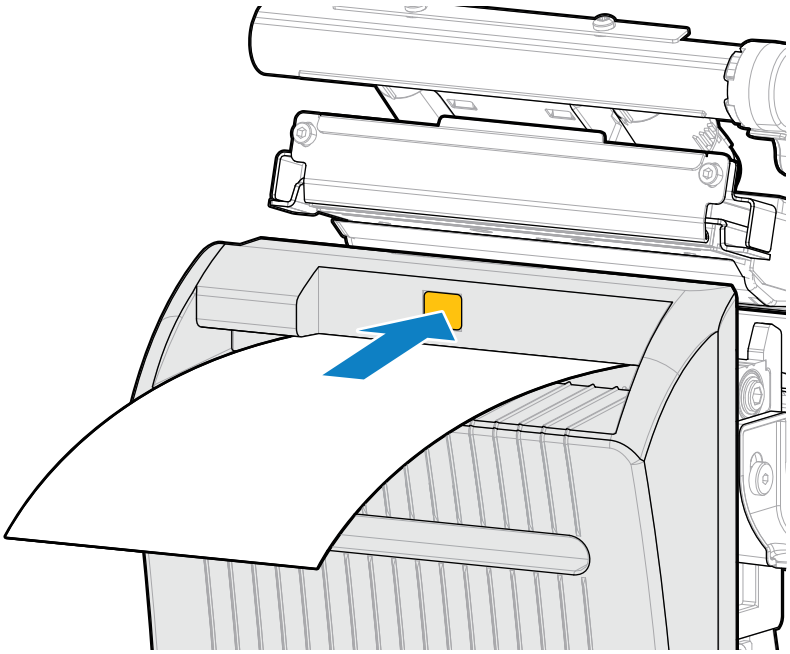

d) Ensure that the inboard edge of the media is fully under the label-taken sensor (1). If it is not, check that the roll of media is placed correctly on the media hanger and adjust the media inward along the entire path.

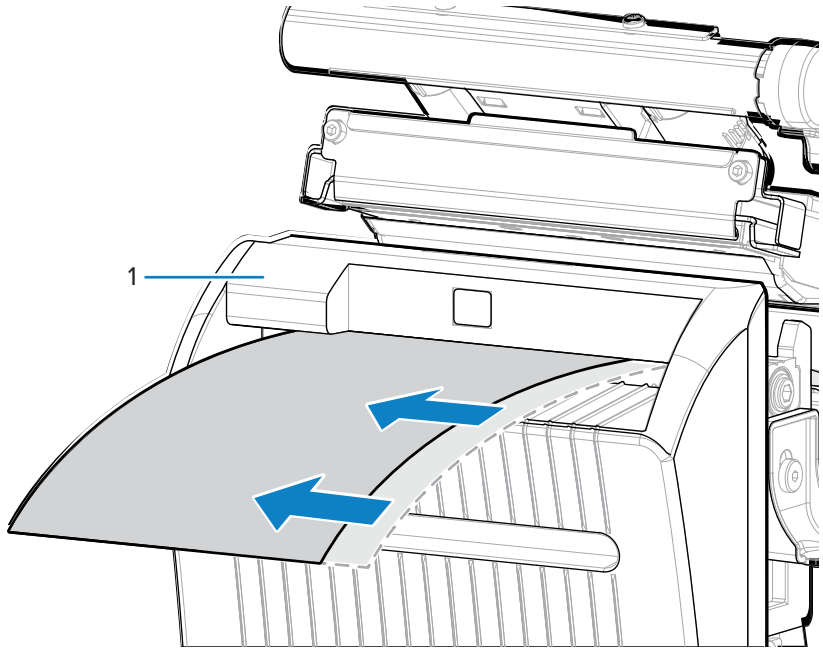

6. Slide in the media guide until it just touches the edge of the media.

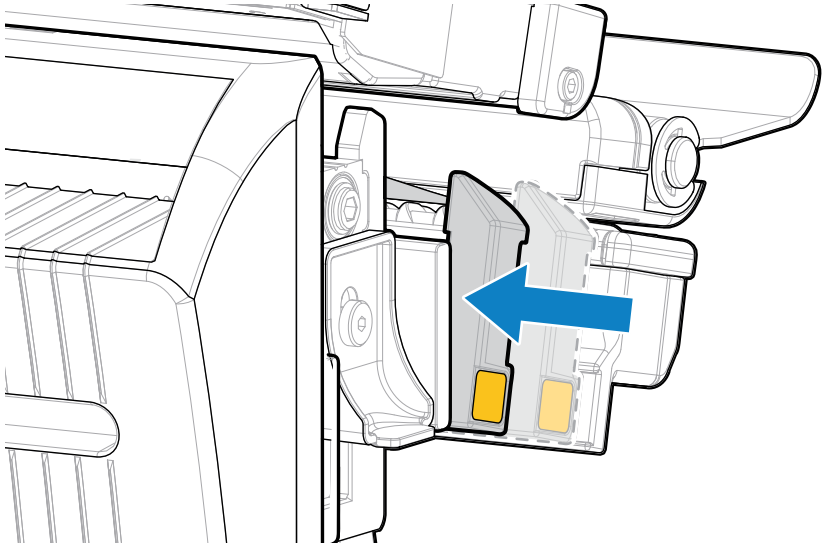

7. Rotate the printhead-open lever downward until it locks the printhead in place.

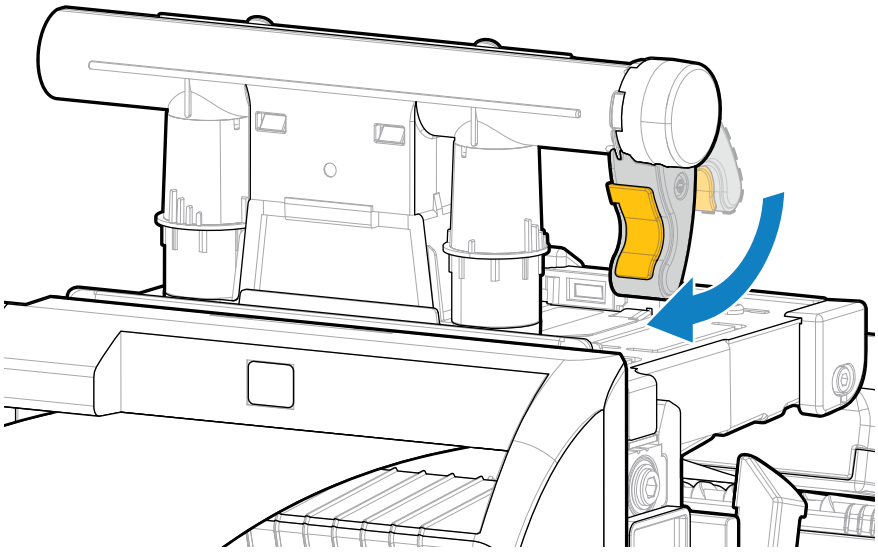

8. Close the media door.

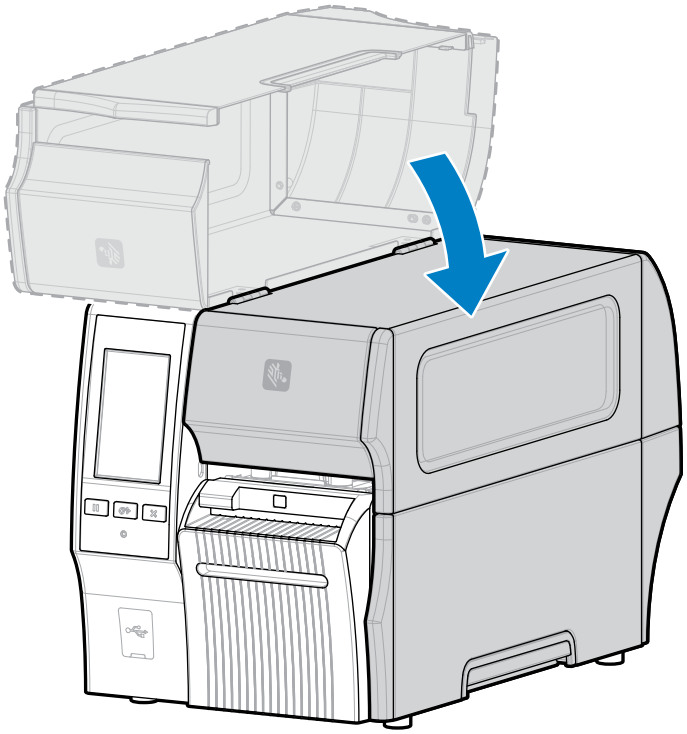

9. For the linerless cutter option to operate as designed, make sure that the firmware version is Link-OS 7.0 or later. Go to Upgrading the Printer Firmware for firmware updating instructions. See the note in the following step for older firmware versions.

10. Set the following parameters through the control panel for linerless operation:

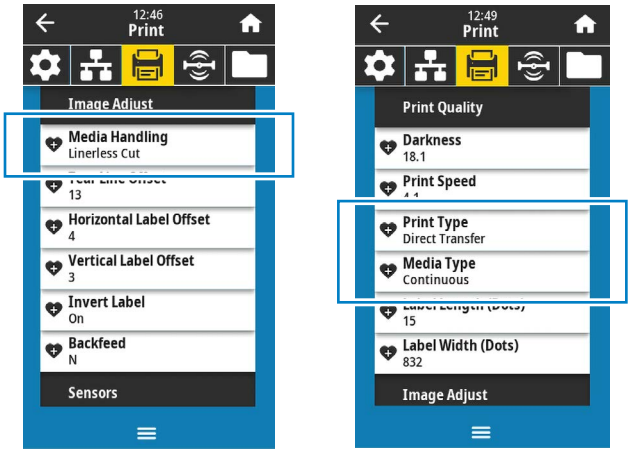

a) Set the printer to **Linerless Cut** mode by touching **Menu** > **Print** > **Image Adjust** > **Media Handling**.

NOTE: In the following situations, set the printer to **Cutter** instead of **Linerless Cut**:

- For the linerless cutter to behave as a standard cutter on a printer with older firmware
- When using standard media (with a liner) with the linerless cutter

b) Set the printer to **Direct Thermal** mode by touching **Menu** > **Print** > **Print Quality** > **Print Type**.

c) Set the printer to **Continuous** mode by touching **Menu** > **Print** > **Print Quality** > **Media Type**.

11. Press **PAUSE** to exit pause mode and enable printing.

The printer may perform a label calibration or feed a label, depending on your settings.

12. For optimal results, calibrate the printer (see Calibrating the Ribbon and Media Sensors on page 131).

13. Verify that your printer can print a configuration label by holding both the **FEED** and **CANCEL** keys for 2 seconds.

Media loading in Linerless Cut mode is complete.

Determining the Type of Ribbon to Use

NOTE: This section applies only to printers that have the Thermal Transfer option installed.

What Kind of Ribbon Can I Use?

Rolls of ribbon are wound with the coated surface of ink on the inside of the roll or on the outside of the roll. This printer with a standard Thermal Transfer option uses ribbon that is coated on the outside. An optional ribbon spindle is available to use ribbon that is coated on the inside. Contact your authorized Zebra reseller for ordering information.

If you are unsure which side of a particular roll of ribbon is coated, perform an adhesive test or a ribbon scratch test to determine which side is coated.

Performing an Adhesive Test

If you have labels available, perform the adhesive test to determine which side of a ribbon is coated. This method works well for ribbon that is already installed.

1. Peel a label from its liner.
2. Press a corner of the sticky side of the label to the outer surface of the roll of ribbon.
3. Peel the label off the ribbon.
4. Observe the results.

   Did flakes or particles of ink from the ribbon adhere to the label?

If ink from the ribbon...	Then...	
Adhered to the label	The ribbon is coated on the outside and it can be used in this printer.	
Did not adhere to the label	The ribbon is coated on the inside and it cannot be used in the standard printer. To verify this result, repeat the test on the other surface of the roll of ribbon.	

Performing a Ribbon Scratch Test

Perform the ribbon scratch test when labels are unavailable.

1. Unroll a short length of ribbon.
2. Place the unrolled section of ribbon on a piece of paper with the outer surface of the ribbon in contact with the paper.
3. Scratch the inner surface of the unrolled ribbon with your fingernail.
4. Lift the ribbon from the paper.

5. Observe the results.

   Did the ribbon leave a mark on the paper?

If the ribbon...	Then...	
Left a mark on the paper	The ribbon is coated on the outside and it can be used in this printer.	
Did not leave a mark on the paper	The ribbon is coated on the inside and it cannot be used in the standard printer. To verify this result, repeat the test on the other surface of the roll of ribbon.	

Loading the Ribbon

IMPORTANT: You are not required to turn off the printer power when working near an open printhead, but Zebra recommends it as a precaution. If you turn off the power, you will lose all temporary settings, such as label formats, and you must reload them before you resume printing.

Use ribbon that is wider than the media to protect the printhead from wear. Ribbon must be coated on the outside for use in a standard printer. For more information, see What Kind of Ribbon Can I Use? on page 72.

1. Raise the media door.

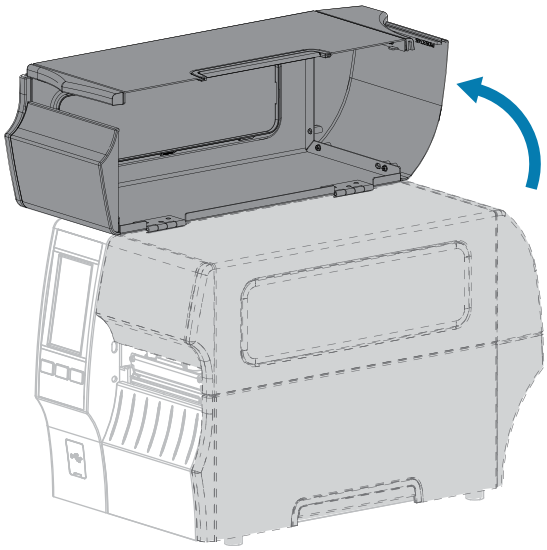

CAUTION: HOT SURFACE: The printhead may be hot and could cause severe burns. Allow the printhead to cool.

2. Open the printhead assembly by rotating the printhead-open lever upward.

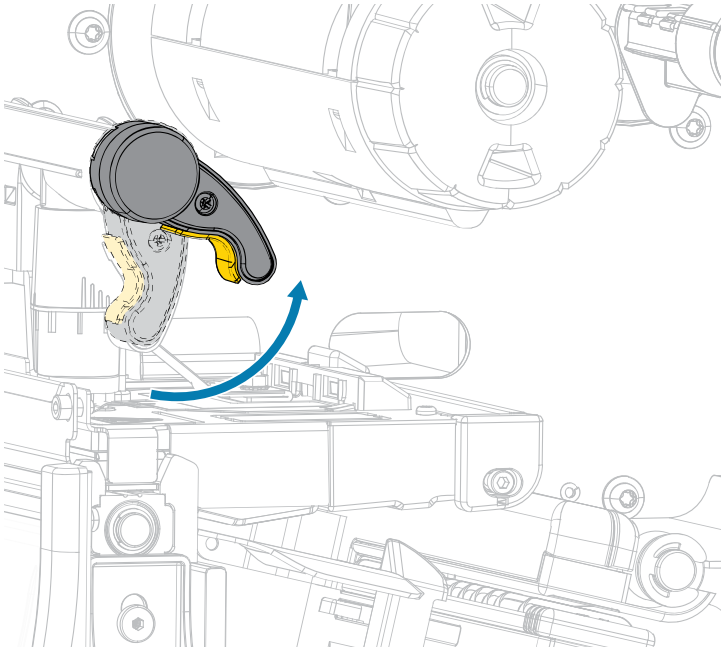

3. Place the roll of ribbon on the ribbon supply spindle with the loose end of the ribbon unrolling as shown. Push the roll back as far as it will go.

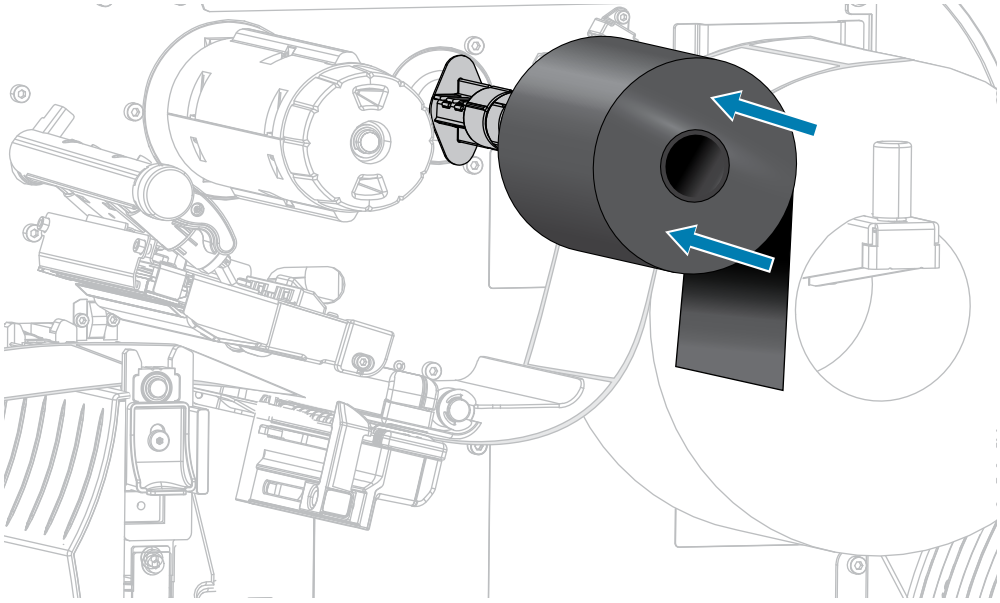

4. Bring the ribbon under the printhead assembly and around its left side, as shown.

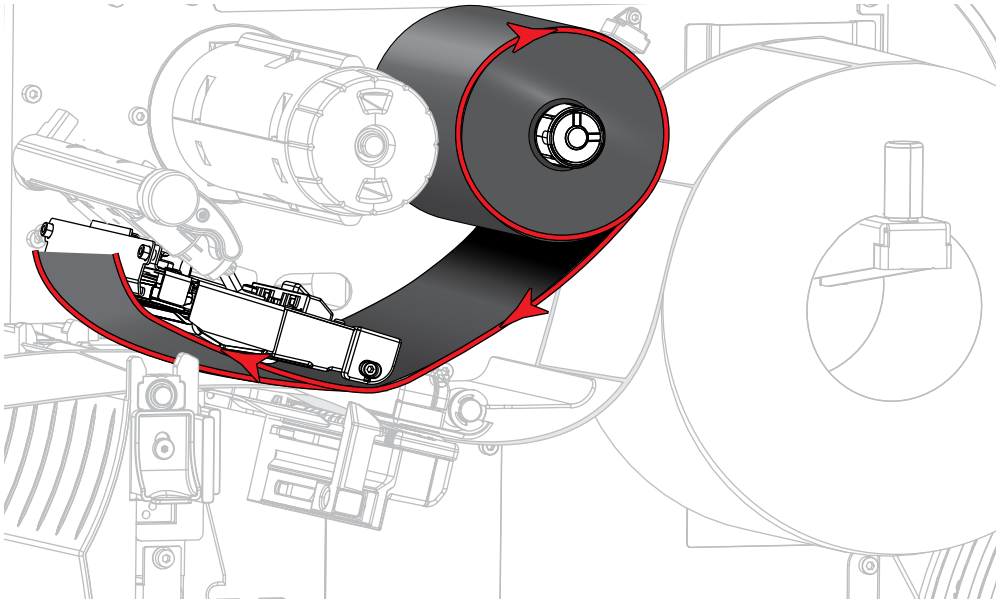

5. With the ribbon tracking as far back as it can under the printhead assembly, wrap the ribbon around the ribbon take-up spindle. Rotate the spindle several turns in the direction shown to tighten and align the ribbon.

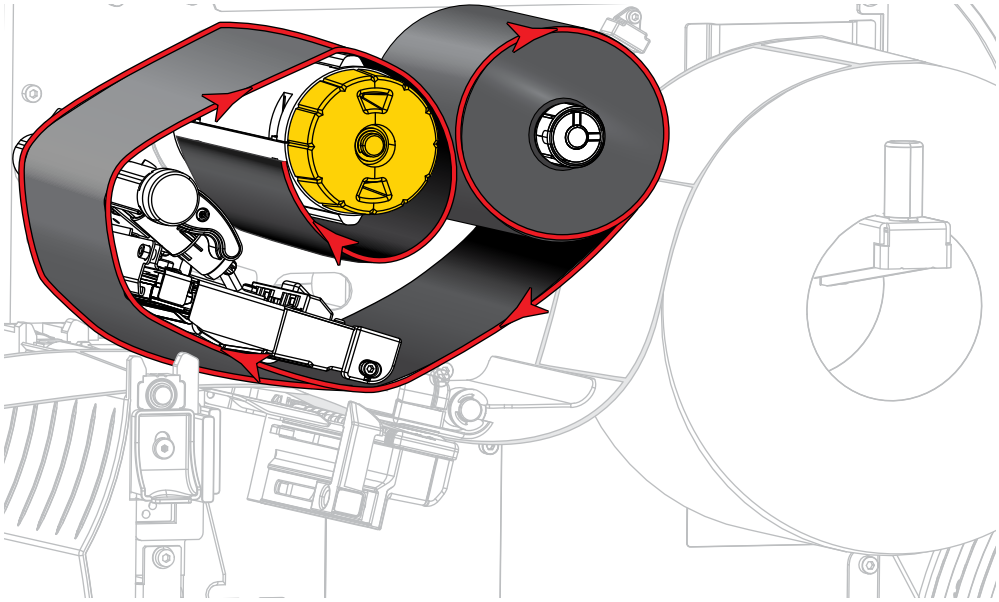

6. Is media already loaded in the printer?

If...	Then...
No	Load media in the printer. (See Loading the Media on page 35.)

If...	Then...
Yes	**a.** Rotate the printhead-open lever downward until it locks the printhead in place. 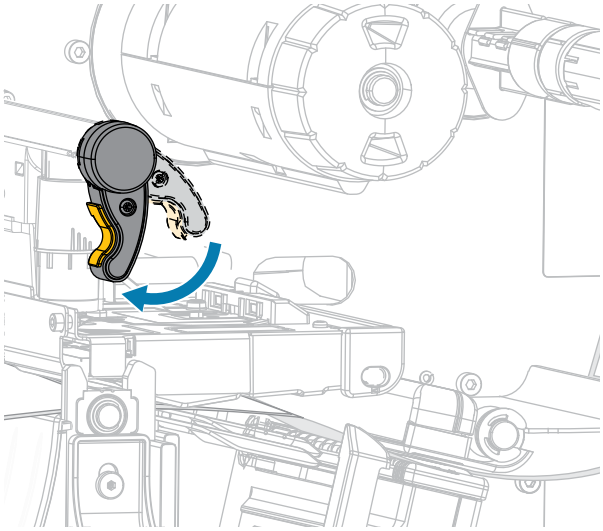 **b.** Close the media door. 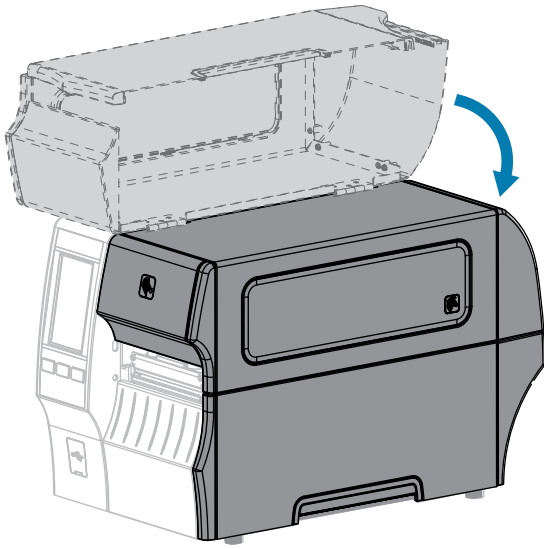 **c.** Press **PAUSE** to exit pause mode and enable printing.

Running the Print Wizard and Printing a Test Label

The Print Wizard configures the printer, prints test labels, and adjusts print quality based on the results of the test labels.

IMPORTANT: When using the Wizards, do not send data to the printer from the host.

For optimal results, use full-width media running the **Print Wizard** or **Set All Wizard**. If the media is smaller than an image to be printed, the results may be truncated or print across multiple labels.

After you have completed the printer setup procedures and run the printer setup wizard, use this section to print a test label. Printing this label allows you to see if your connection is working and if you need to adjust any of the print settings.

1. On the Home screen, touch **Wizards** > **Print** > **Start Print**.
2. Follow the prompts to specify the following information:
   - print type (Thermal Transfer or Direct Thermal)
   - label type (Continuous, Gap/Notch, or Mark)
   - label width
   - collection method (tear off, peel-off, rewind, cutter, delayed cut, linerless peel, linerless rewind, linerless tear, or applicator)

   After you have specified these, the wizard instructs you to load media and then to place a label over the media sensor.
3. Load media so that a label is over the green light from the media sensor, and then touch the checkmark.

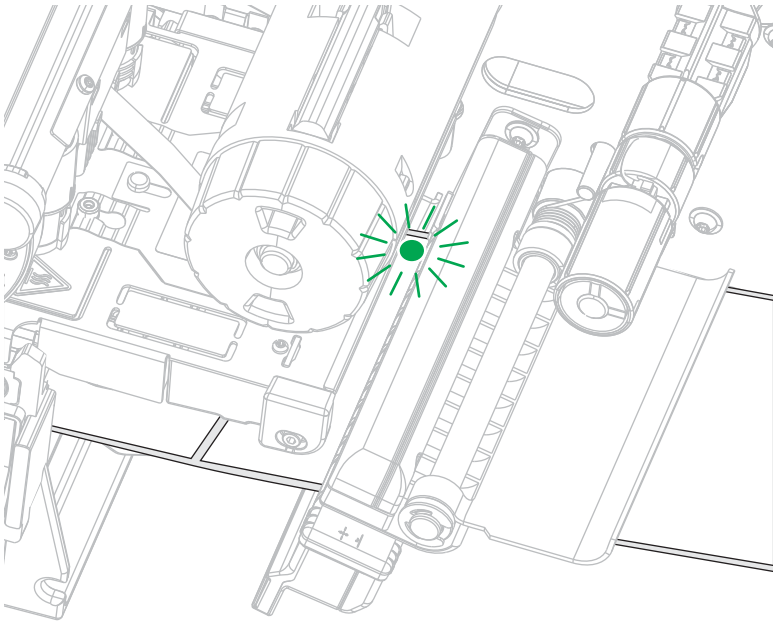

4. At the prompt, close the printhead, and then touch the next checkmark.

   The printer calibrates and then asks if you would like to print a test label.
5. Follow the prompts until the printer completes auto calibration.

6. When asked to print a test label, touch the checkmark.

   A test label similar to this one prints. If your labels are smaller than the image, only a portion of the test label will print.



7. Examine the position of the label over the tear bar. If necessary, shift the position of the media over the tear-off bar after printing.

   - If the space between labels falls on the tear bar, continue with the next step.
   - If the space between labels does not fall directly on the tear bar, shift the position of the media over the tear bar after printing.

     Lower numbers move the media into the printer by the specified number of dots (the tear line moves closer to the edge of the label just printed).

     Higher numbers move the media out of the printer (the tear line moves closer to the leading edge of the next label).

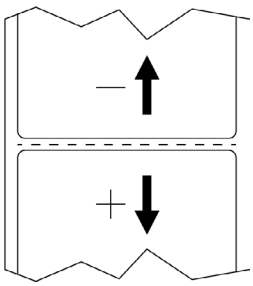

8. Examine the quality of the image on the test label. Is the quality of the barcode and text on the test label acceptable? See Evaluating Barcode Quality on page 160 for assistance.
   - If yes, touch the check mark, and then check what other issues may be affecting your print quality. See Printing or Print Quality Issues on page 176.
   - If no, adjust the print quality manually by changing darkness and speed settings through the printer's menu system, or run the Print Quality Assistance wizard. See Using the Print Quality Assistance Wizard on page 79.

Using the Print Quality Assistance Wizard

1. From the last step of the Print wizard, touch **Print Quality Assistance**.

   The printer prompts for the number of test labels to print. The more labels you choose to print, the more choices that you will have available to decide on label quality. In general, if your test label from the previous wizard was acceptable, a lower number of test labels in this step will probably suffice.
2. Select a number of test labels to print.

   The printer prints the specified number of test labels and prompts you for the preferred test label.
3. Decide which test label is the optimal quality. (Refer to Evaluating Barcode Quality on page 160 for assistance.) If none of the labels are acceptable, use the arrow to back up a screen in the wizard, and select a larger number of test labels.
4. In the list on the display, select the identifier for the test label with the specified quality, and then touch the checkmark.

   The printer changes the darkness and speed to the levels used on the preferred test label.
5. If necessary, see Printing or Print Quality Issues on page 176 to see what other issues may be affecting your print quality.

The print setup procedure is complete.

Installing Label Design Software

Select and install the software that you will use to create label formats for your printer.

One option is ZebraDesigner, which you can download from zebra.com/zebradesigner. You can choose to use ZebraDesigner Essentials for free or purchase ZebraDesigner Professional for a more robust toolset.

Figure 2 Sample ZebraDesigner Essentials Screen

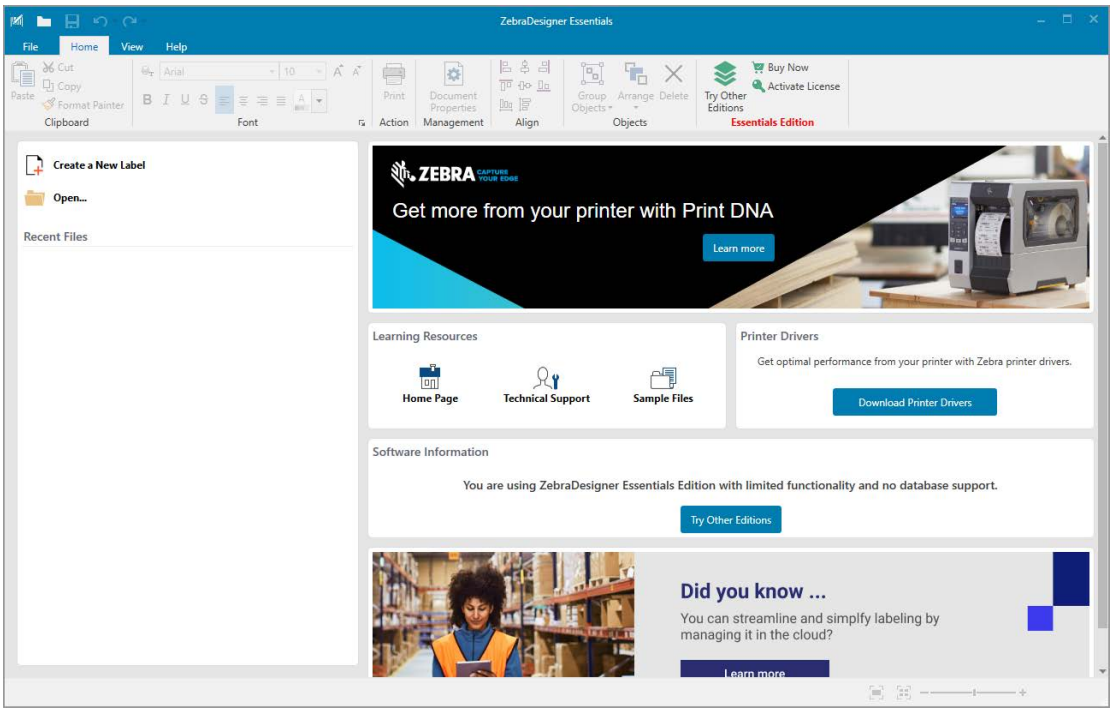

ZebraDesigner System Requirements

System requirements for the ZebraDesigner label-format design application are listed below:

- 32-bit or 64-bit Windows 10 desktop editions, Windows 11 desktop editions, Windows Server 2016, Windows Server 2019, Windows Server 2022 operating systems.
- CPU: Intel or compatible x86 family processor
- Memory: 2 GB or more RAM
- Hard drive: 1 GB of available disk space
- Microsoft.NET Framework Version 4.7.2
- Display: 1366 × 768 or higher resolution monitor
- ZDesigner printer drivers

NOTE: Remote Desktop Services and Virtual Machines are not supported.

Printer Configuration and Adjustment

This section assists you with configuration of the printer and adjustments to the printer.

Home Screen

The printer's Home screen shows you the printer's current status and allows you to access the printer's menus. You can rotate the image of the printer 360 degrees to view it from all angles.





NOTE: If the background color of the Home screen is yellow or red, the printer is in an alert or error state. For more information, see Alert and Error States.

The following items are located on the Home screen **Print Status** tab:

- Menu—Allows you to change the printer settings. See User Menus.

- Wizards—Allows you to change printer settings by going through prompts. See Printer Wizards.

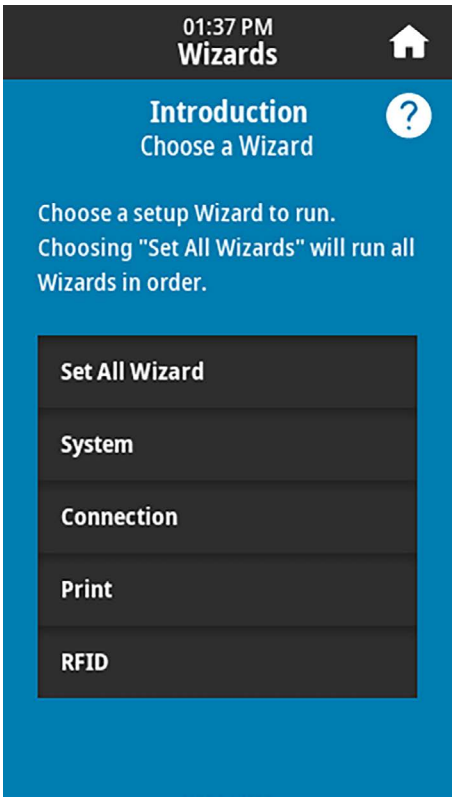

- Shortcuts—Allows you to quickly access the most recent menu items and to save your favorites. Touch the darkened heart icon next to a menu item to save it to your list of favorites. Items in the favorites are shown in the order in which they were saved.

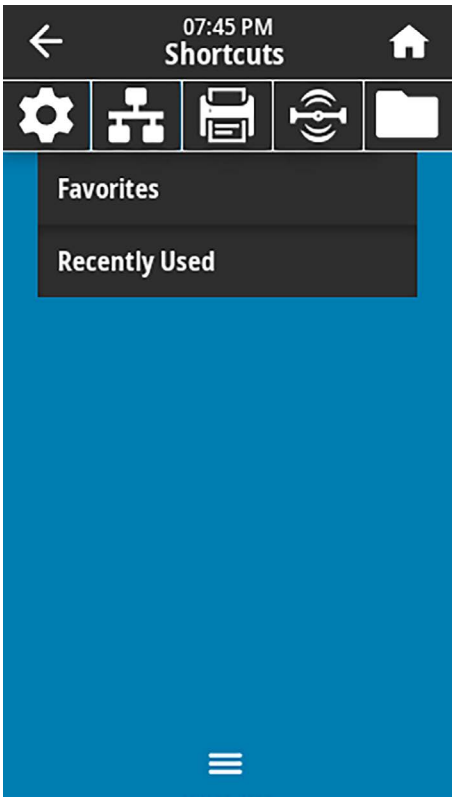

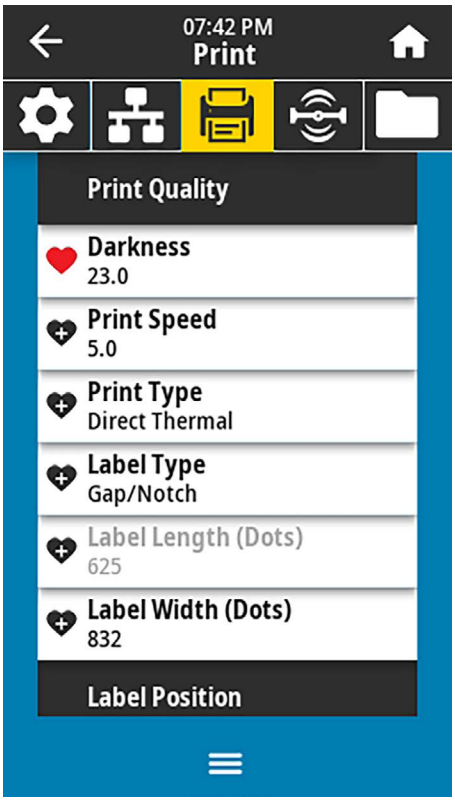

Changing Printer Settings

This section presents the printer settings that you can change and identifies tools for changing them.These tools include the following:

- The Windows driver installed previously. (See Changing Printer Settings through the Windows Driver on page 84 for more information.)
- The printer wizards. (See Printer Wizards on page 84.)
- The printer's user menus (See User Menus on page 85 for more information.)
- Zebra Printer Setup Utilities:
  - Windows computers
  - Android devices
  - Apple devices
- ZPL and Set/Get/Do (SGD) commands (See the Zebra Programming Guide for more information.)
- The printer's web pages when the printer has an active wired or wireless print server connection (See the ZebraNet Wired and Wireless Print Servers User Guide for more information.)

Changing Printer Settings through the Windows Driver

1. From the Windows Start Menu, go to **Printers & Scanners**.
2. Click your printer in the list of available printers, and then click **Manage**.
3. Click **Printing Preferences**.

   The ZDesigner window for your printer displays.

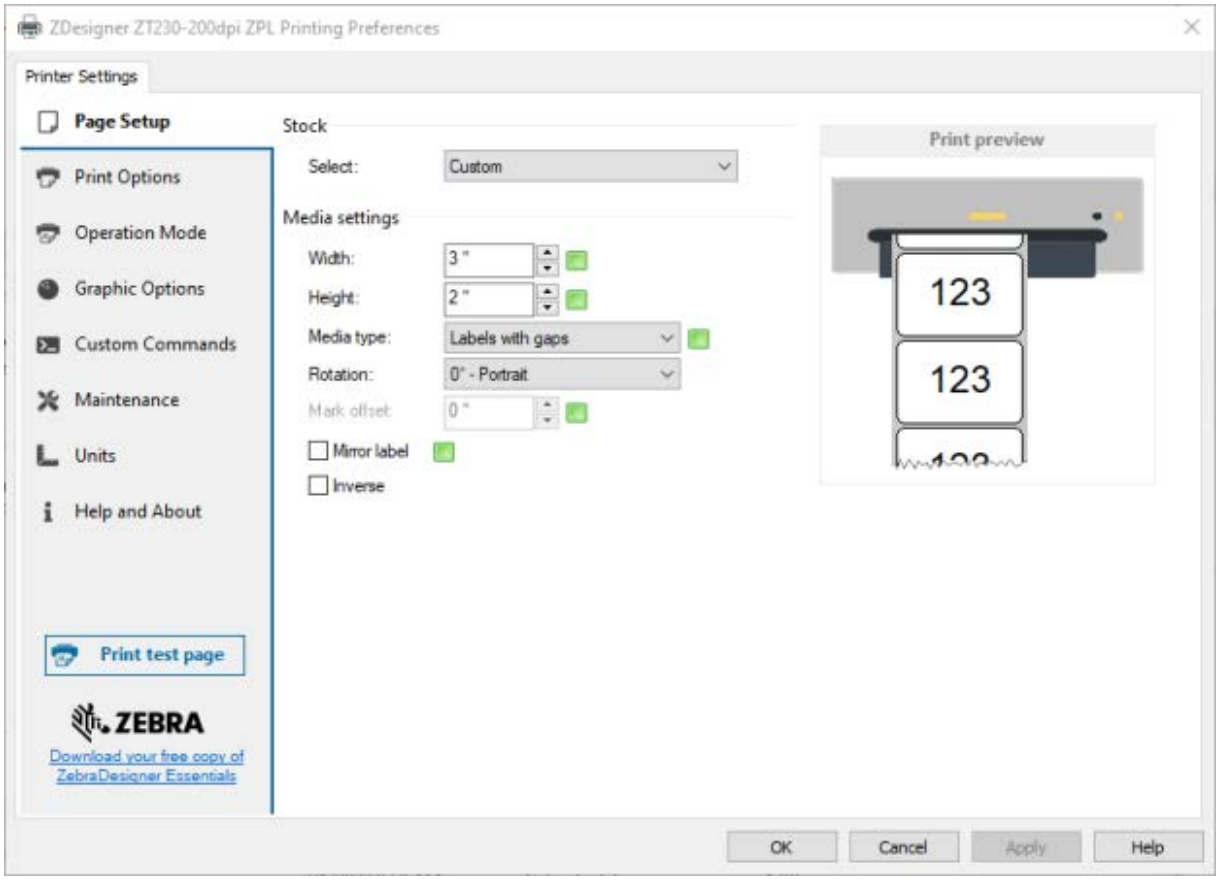

4. Change the settings as desired, and then click **OK**.

Printer Wizards

Printer wizards walk you through the setup process for various printer settings and features.

The following wizards are available:

- Set All Wizard—runs all the wizards in sequence.
- System Wizard—sets up non-print related operating system settings.
- Connection Wizard—configures the printer's connectivity options.
- Print Wizard—configures key printing parameters and features. See Running the Print Wizard and Printing a Test Label on page 77.
- RFID Wizard—sets up the RFID subsystem's operations.

On the Home screen, touch **Wizards** to see the available options.

For more information about individual settings set by any of the wizards, see User Menus on page 85.

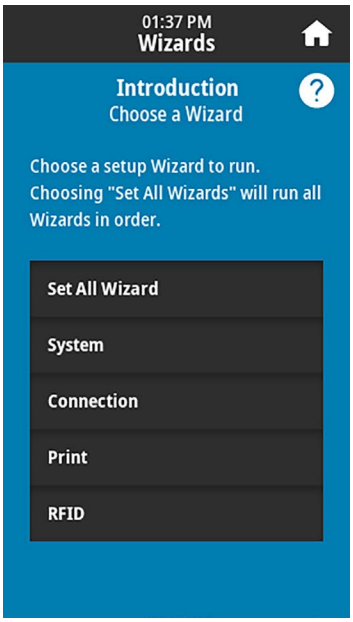

IMPORTANT:

When using the Wizards, do not send data to the printer from the host.

For optimal results, use full-width media running Print Wizard or Set All Wizards. If the media is shorter than an image to be printed, the image may be truncated or print across multiple labels.

User Menus

Use the printer's user menus to configure the printer as needed.

For detailed information on each of these menus, see System Menu on page 87, Connection Menu on page 95, Print Menu on page 110, RFID Menu on page 121, and Storage Menu on page 128.

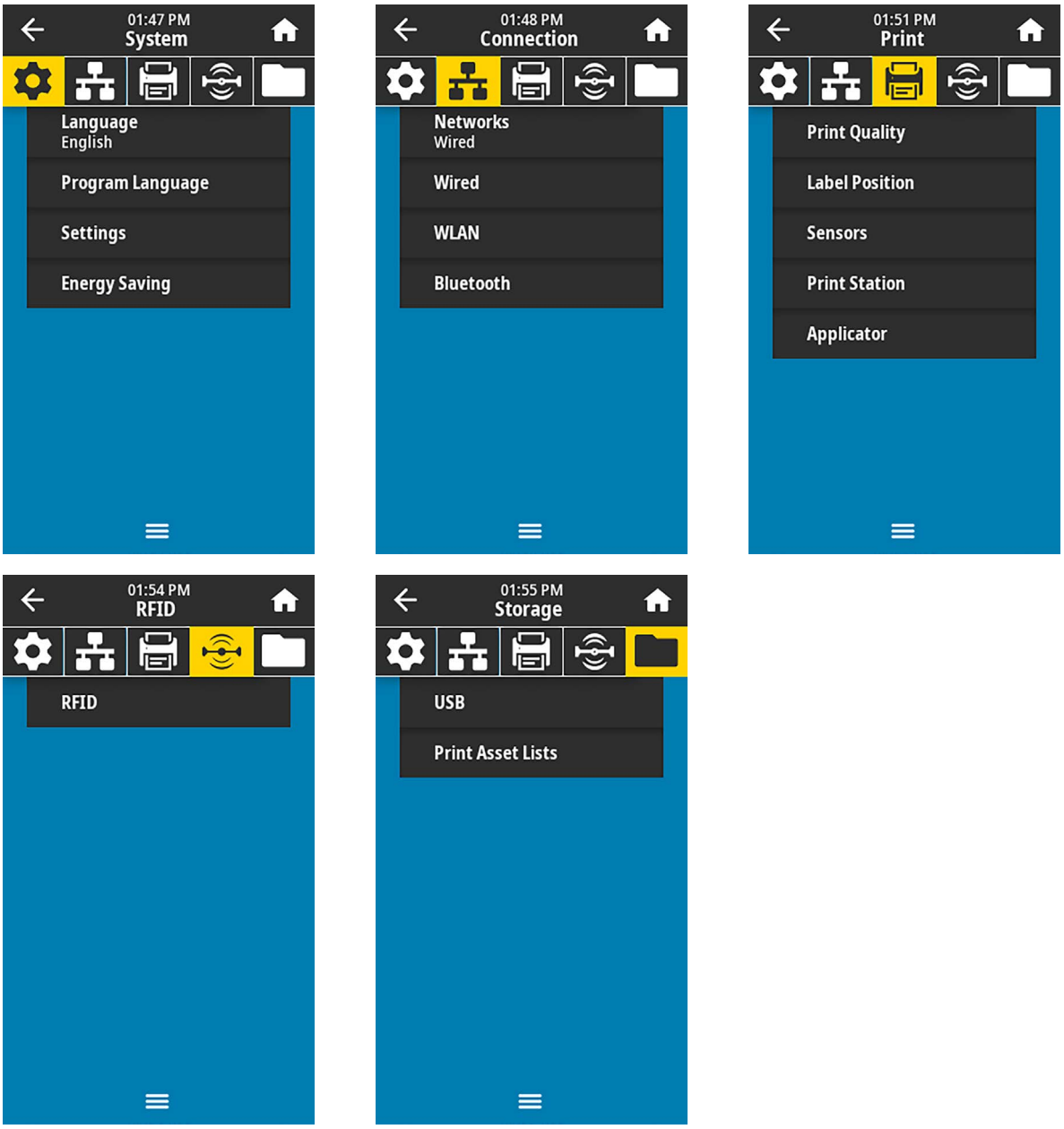

You can modify printer settings through the user menus or optionally using the methods listed below. (The user menu descriptions in this section include information on these optional methods where applicable.)

- ZPL and Set/Get/Do (SGD) commands. (See the Zebra Programming Guide at zebra.com/manuals for more information.)
- The printer's web pages, in cases where the printer has an active wired or wireless print server connection. (See the ZebraNet Wired and Wireless Print Servers User Guide at zebra.com/manuals for more information.)

You can also use the printer's task wizards to change some settings (see Printer Wizards on page 84).

System Menu

Menu Display	Menu Option Description	
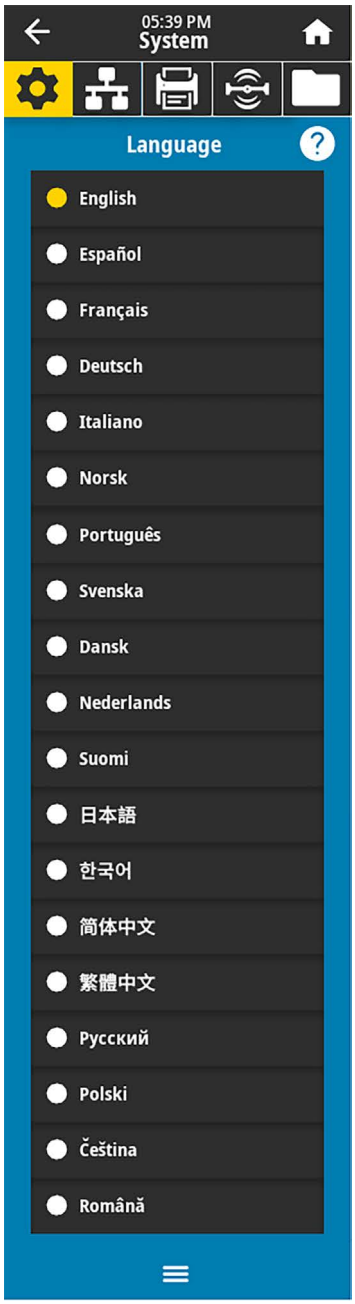	**System** > **Language** If necessary, change the language that the printer displays. This change affects the words shown on the following: • the Home screen • the user menus • error messages • the printer configuration label, the network configuration label, and other labels that you can select to print through the user menus	
	Accepted values:	ENGLISH, SPANISH, FRENCH, GERMAN, ITALIAN, NORWEGIAN, PORTUGUESE, SWEDISH, DANISH, DUTCH, FINNISH, CZECH, JAPANESE, KOREAN, ROMANIAN, RUSSIAN, POLISH, SIMPLIFIED CHINESE, TRADITIONAL CHINESE The selections for this parameter are displayed in the actual languages to make it easier for you to find one that you are able to read.
	Related ZPL command(s):	`^KL`
	SGD command used:	`display.language`
	Printer web page:	**View and Modify Printer Settings** > **General Setup** > **Language**

Menu Display	Menu Option Description	
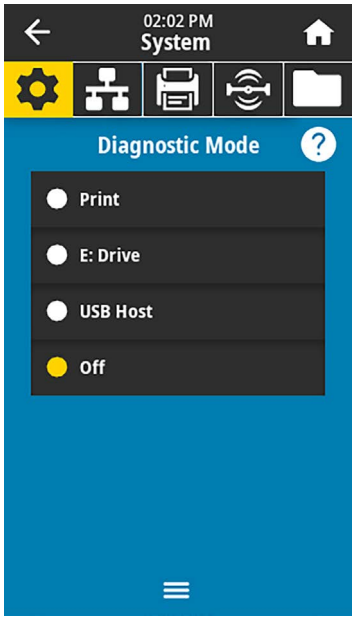	**System** > **Program Language** > **Diagnostic Mode** Use this diagnostics tool to make the printer output hexadecimal values for all data received by the printer. (For more information, see Using Communication Diagnostics Mode on page 165.)	
	Accepted values:	`PRINT`—The printer prints the text and hexadecimal representation of data bytes received instead of printing the formatted labels which that data might represent. `E: Drive`—The printer saves the information to its E: drive. `USB Host`—The printer saves the information to a USB Host memory device if one is present. `OFF`—The printer's normal operating mode. Cycling power also returns the printer to `OFF` mode. **NOTE:** This command does not capture a network packet trace.
	Related ZPL command(s):	`~JD` to enable `~JE` to disable
	SGD command used:	`input.capture`
	Control panel key(s):	Hold **PAUSE** + **FEED** for 2 seconds when the printer is in the Ready state.
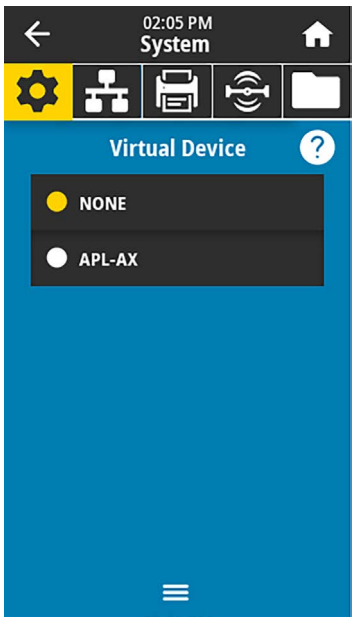	**System** > **Program Language** > **Virtual Device** If any Virtual Device apps are installed on your printer, you may view or enable/disable them from this user menu. For more information, go to the User Guide for the appropriate Virtual Device, or contact your local reseller.)	

Menu Display	Menu Option Description
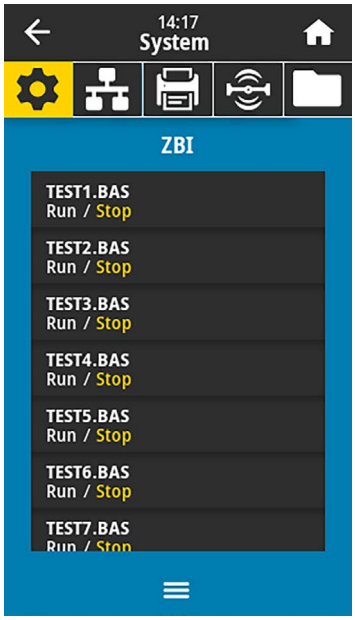	**System** > **Program Language** > **ZBI** Zebra Basic Interpreter (ZBI 2.0™) is a programming option that may be purchased for your printer. If you would like to purchase this option, contact your Zebra reseller for more information. If ZBI programs have been downloaded to your printer, you may select one to run using this menu item. If no program exists on your printer, NONE is listed. When ZBI programs have been downloaded but none are running, the printer lists all available programs. To run one of them, touch **Run** (highlighted in white) under the program name. After a program is running, only that program is listed. Touch **Stop** (highlighted in white) to end the program. 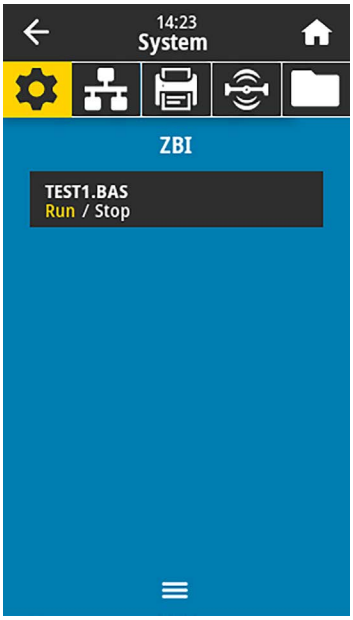
	SGD command used: — `zbi.key`—Shows if a valid ZBI 2.0 license is installed on the printer. `zbi.enable`—Shows if the ZBI 2.0 option is enabled or disabled on the printer. **NOTE:** `zbi.key` must be set to `"enabled"` and `zbi.enable` must be set to `"on"` to be able to use the ZBI feature.

Menu Display	Menu Option Description	
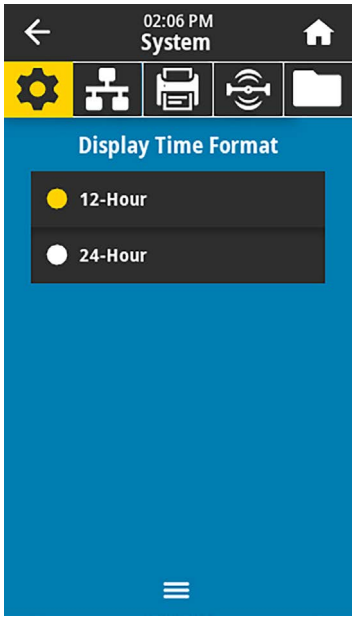	**System** > **Settings** > **Display Time Format** Select the time format used by the printer.	
	Accepted values:	12-Hour, 24-Hour
	SGD command used:	`device.idle_display_value`
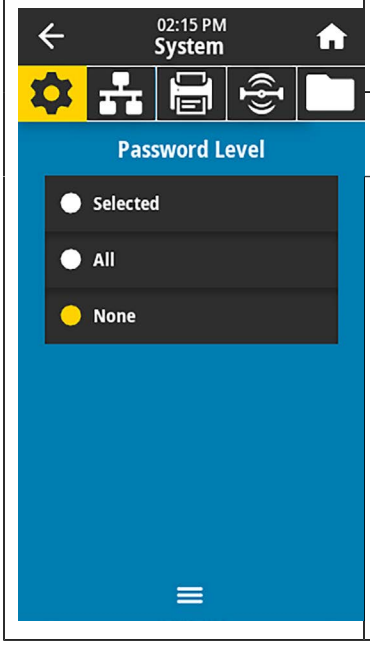	**System** > **Settings** > **Password Level** Select the level of password protection for user menu items.	
	Accepted values:	Selected, All, None
	SGD command used:	`display.password.level`

Menu Display	Menu Option Description	
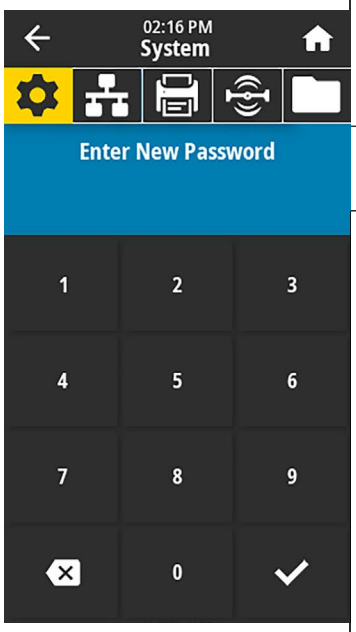	**System** > **Settings** > **Set Password** Set a new printer password for menu items protected by the previous parameter. The default printer password is `1234`.	
	Accepted values:	Numerals 0-9
	Related ZPL command(s):	`^KP`
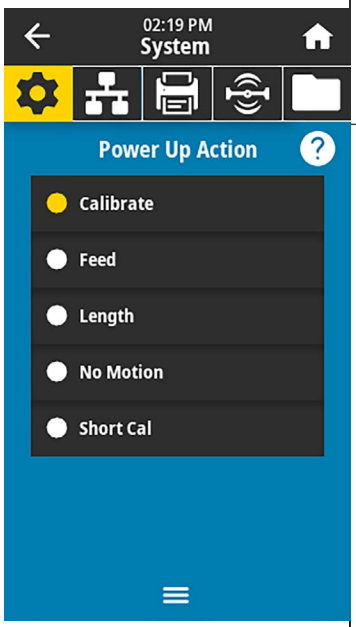	**System** > **Settings** > **Power Up Action** Set the action for the printer to take during the power-up sequence.	
	Accepted values:	CALIBRATE—Adjusts sensor levels and thresholds, determines the label length, and feeds the media to the next web. FEED—Feeds the labels to the first registration point. LENGTH—Determines the label length using current sensor values, and feeds the media to the next web. NO MOTION—Tells the printer not to move the media. You must manually ensure that the web is positioned correctly, or press feed to position the next web. SHORT CAL—Sets the media and web thresholds without adjusting sensor gain, determines the label length, and feeds the media to the next web.
	Related ZPL command(s):	`^MF`
	SGD command used:	`ezpl.power_up_action`
	Printer web page:	**View and Modify Printer Settings** > **Calibration**

<table>
<tr><th>Menu Display</th><th colspan="2">Menu Option Description</th></tr>
<tr><td rowspan="5">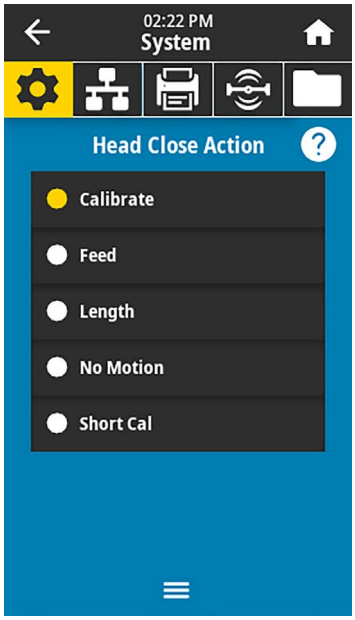
</td><td colspan="2">System > Settings > Head Close Action
Set the action for the printer to take when you close the printhead.</td></tr>
<tr><td>Accepted values:</td><td>CALIBRATE—Adjusts sensor levels and thresholds, determines the label length, and feeds the media to the next web.
FEED—Feeds the labels to the first registration point.
LENGTH—Determines the label length using current sensor values, and feeds the media to the next web.
NO MOTION—Tells the printer not to move the media. You must manually ensure that the web is positioned correctly, or press feed to position the next web.
SHORT CAL—Sets the media and web thresholds without adjusting sensor gain, determines the label length, and feeds the media to the next web.</td></tr>
<tr><td>Related ZPL command(s):</td><td><code>^MF</code></td></tr>
<tr><td>SGD command used:</td><td><code>ezpl.head_close_action</code></td></tr>
<tr><td>Printer web page:</td><td>View and Modify Printer Settings > Calibration</td></tr>
<tr><td>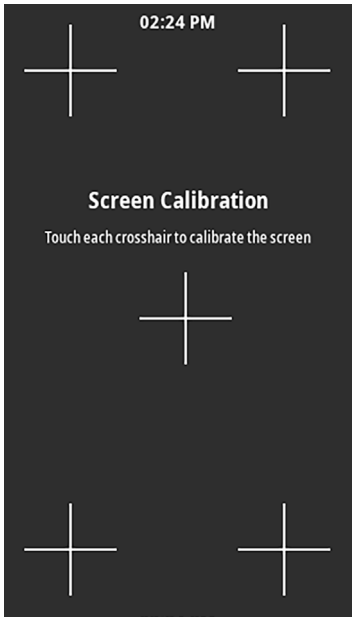
</td><td colspan="2">System > Settings > Screen Calibration
Touch each crosshair to calibrate the screen.</td></tr>
</table>

Menu Display	Menu Option Description	
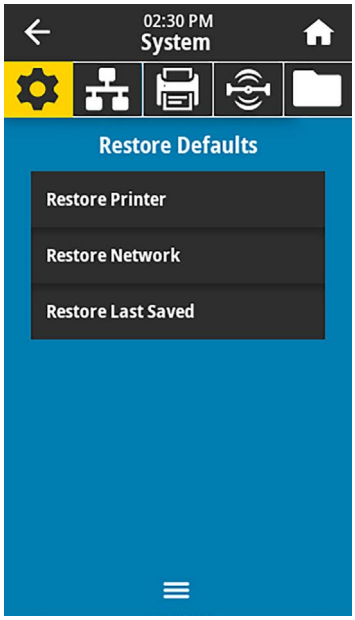	**System** > **Settings** > **Restore Defaults** Restore specific printer, print server, and network settings back to the factory defaults. Use care when loading defaults because you will need to reload all settings that you changed manually. This menu item is available through two user menus with different default values for each.	
	Accepted values:	PRINTER—Restores all printer settings other than the network settings back to the factory defaults. Use care when loading defaults because you will need to reload all settings that you changed manually. NETWORK—Reinitializes the printer's wired or wireless print server. With a wireless print server, the printer also re-associates with your wireless network. LAST SAVED—Loads settings from the last permanent save.
	Related ZPL command(s):	PRINTER— `^JUF` NETWORK— `^JUN` LAST SAVED— `^JUR`
	Control panel key(s):	PRINTER—Hold **FEED** + **PAUSE** during printer power-up to reset the printer parameters to factory values. NETWORK—Hold **CANCEL** + **PAUSE** during printer power-up to reset the network parameters to factory values. LAST SAVED—N/A
	Printer web page:	PRINTER—**View and Modify Printer Settings** > **Restore Default Configuration** NETWORK—**Print Server Settings** > **Reset Print Server** LAST SAVED—**View and Modify Printer Settings** > **Restore Saved Configuration**

Menu Display	Menu Option Description
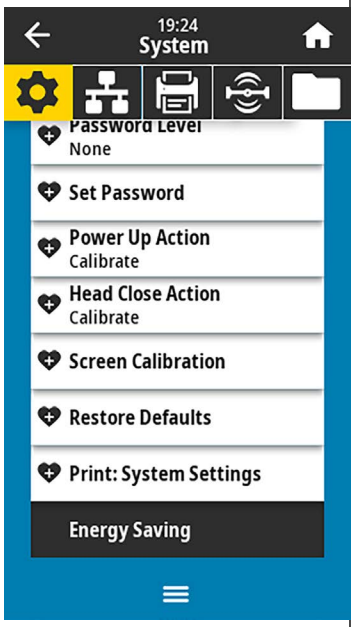	**System** > **Settings** > **Print: System Settings** Prints a printer configuration label. The following is a sample label. 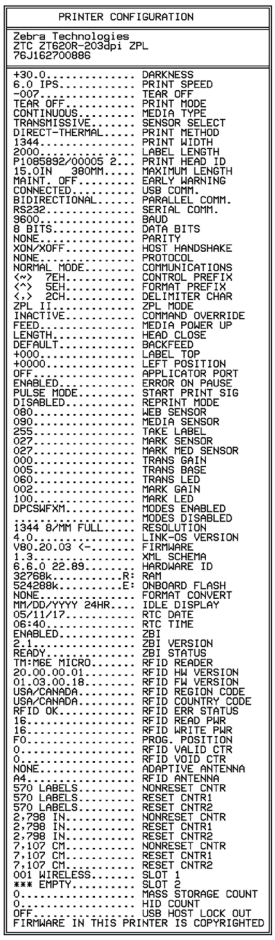
	Related ZPL command(s): ~WC
	Control panel key(s): Do one of the following:* • Hold **CANCEL** during printer power-up. (Formerly called a CANCEL self test.) • Hold **FEED** + **CANCEL** for 2 seconds when the printer is in the Ready state. **NOTE:** * Prints a printer configuration label and a network configuration label.
	Printer web page: **View and Modify Printer Settings** > **Print Listings on Label** * **NOTE:** * Prints a printer configuration label and a network configuration label.

PRINTER CONFIGURATION

Zebra Technologies
ZTC ZT620R-203dpi ZPL
76J162700086

+30.0	DARKNESS
6.0 IPS	PRINT SPEED
-007	TEAR OFF
TEAR OFF	PRINT MODE
CONTINUOUS	MEDIA TYPE
TRANSMISSIVE	SENSOR SELECT
DIRECT-THERMAL	PRINT METHOD
1344	PRINT WIDTH
2000	LABEL LENGTH
P1085892/00005 2	PRINT HEAD ID
15.0IN 380MM	MAXIMUM LENGTH
MAINT. OFF	EARLY WARNING
CONNECTED	USB COMM.
BIDIRECTIONAL	PARALLEL COMM.
RS232	SERIAL COMM.
9600	BAUD
8 BITS	DATA BITS
NONE	PARITY
XON/XOFF	HOST HANDSHAKE
NONE	PROTOCOL
NORMAL MODE	COMMUNICATIONS
<~> 7EH	CONTROL PREFIX
<^> 5EH	FORMAT PREFIX
<,> 2CH	DELIMITER CHAR
ZPL II	ZPL MODE
INACTIVE	COMMAND OVERRIDE
FEED	MEDIA POWER UP
LENGTH	HEAD CLOSE
DEFAULT	BACKFEED
+000	LABEL TOP
+0000	LEFT POSITION
OFF	APPLICATOR PORT
ENABLED	ERROR ON PAUSE
PULSE MODE	START PRINT SIG
DISABLED	REPRINT MODE
080	WEB SENSOR
090	MEDIA SENSOR
255	TAKE LABEL
027	MARK SENSOR
027	MARK MED SENSOR
000	TRANS GAIN
005	TRANS BASE
060	TRANS LED
002	MARK GAIN
100	MARK LED
DPCSWFXM	MODES ENABLED
	MODES DISABLED
1344 8/MM FULL	RESOLUTION
4.0	LINK-OS VERSION
V80.20.03 <-	FIRMWARE
1.3	XML SCHEMA
6.6.0 22.89	HARDWARE ID
32768k R:	RAM
524288k E:	ONBOARD FLASH
NONE	FORMAT CONVERT
MM/DD/YYYY 24HR	IDLE DISPLAY
05/11/17	RTC DATE
08:40	RTC TIME
ENABLED	ZBI
2.1	ZBI VERSION
READY	ZBI STATUS
TM:M6E MICRO	RFID READER
20.00.00.01	RFID HW VERSION
01.03.00.18	RFID FW VERSION
USA/CANADA	RFID REGION CODE
USA/CANADA	RFID COUNTRY CODE
RFID OK	RFID ERR STATUS
16	RFID READ PWR
16	RFID WRITE PWR
FO	PROG. POSITION
0	RFID VALID CTR
0	RFID VOID CTR
NONE	ADAPTIVE ANTENNA
A4	RFID ANTENNA
570 LABELS	NONRESET CNTR
570 LABELS	RESET CNTR1
570 LABELS	RESET CNTR2
2,798 IN	NONRESET CNTR
2,798 IN	RESET CNTR1
2,798 IN	RESET CNTR2
7,107 CM	NONRESET CNTR
7,107 CM	RESET CNTR1
7,107 CM	RESET CNTR2
001 WIRELESS	SLOT 1
*** EMPTY	SLOT 2
0	MASS STORAGE COUNT
0	HID COUNT
OFF	USB HOST LOCK OUT

FIRMWARE IN THIS PRINTER IS COPYRIGHTED

Menu Display	Menu Option Description	
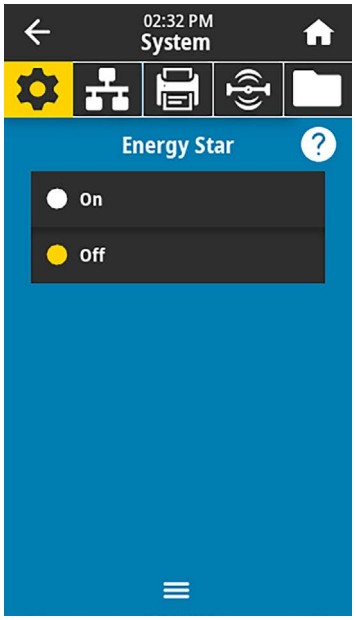	**System** > **Energy Saving** > **Energy Star** When Energy Star mode is enabled, the printer goes into a "sleep" mode after a timeout period, thereby lowering power consumption. Press any button on the control panel to bring the printer back to an active state.	
	Accepted values:	ON, OFF
	SGD command used:	`power.energy_star.enable` `power.energy_star_timeout`(to set the amount of idle time before Energy Star is invoked)

Connection Menu

Menu Display	Menu Option Description	
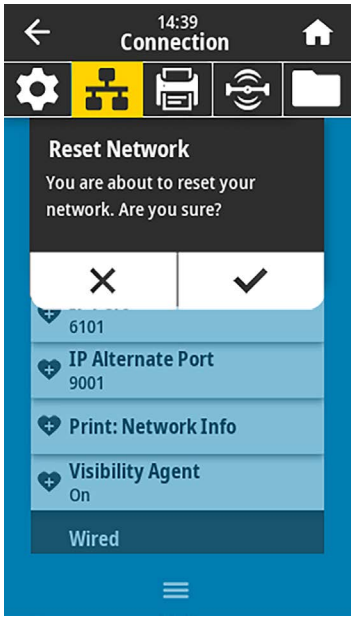	**Connection** > **Networks** > **Reset Network** This option resets the wired or wireless print server and saves any changes that you made to any network settings. **IMPORTANT:** You must reset the print server to allow changes to the network settings to take effect.	
	Related ZPL command(s):	`~WR`
	Printer web page:	**Print Server Settings** > **Reset Print Server**

Menu Display	Menu Option Description	
	**Connection** > **Networks** > **Primary Network** View or modify whether the wired or wireless print server is considered primary. You may select which one is primary.	
	Accepted values:	Wired, WLAN
	Related ZPL command(s):	`^NC`
	SGD command used:	`ip.primary_network`
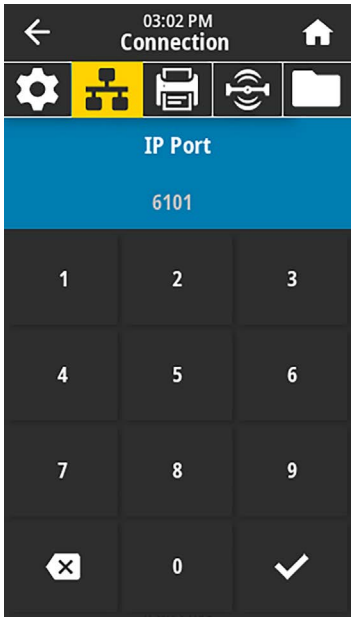	**Connection** > **Networks** > **IP Port** This printer setting refers to the internal wired print servers port number that the TCP print service is listening on. Normal TCP communications from the host should be directed to this port.	
	SGD command used:	`ip.port`
	Printer web page:	**View and Modify Printer Settings** > **Network Communications Setup** > **TCP/IP Settings**

Menu Display	Menu Option Description	
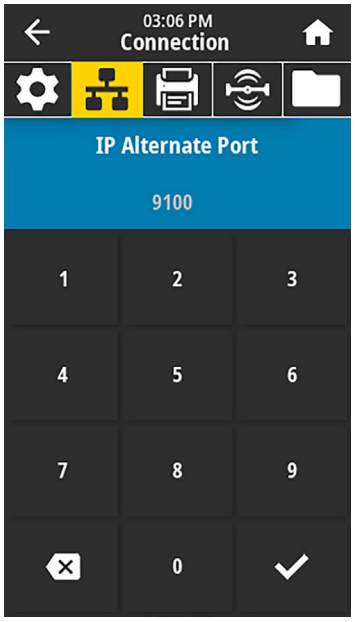	**Connection** > **Networks** > **IP Alternate Port** This command sets the port number of the alternate TCP port. **NOTE:** Print servers supporting this command will monitor both the primary port and the alternate port for connections at the same time.	
	SGD command used:	`ip.port_alternate`
	Printer web page:	**View and Modify Printer Settings** > **Network Communications Setup** > **TCP/IP Settings**

Menu Display	Menu Option Description
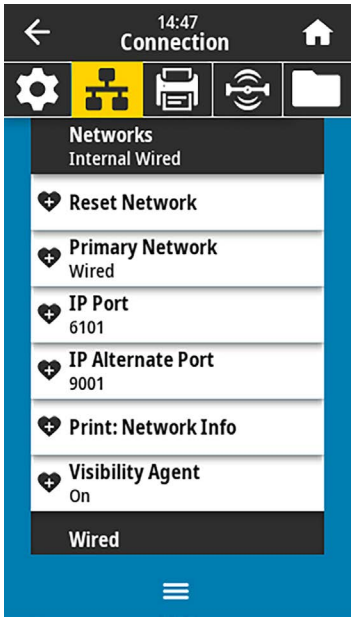	**Connection** > **Networks** > **Print: Network Info** Prints the settings for any print server or Bluetooth device that is installed. The following is a sample label.  Network Configuration Zebra Technologies ZTC ZTXXX-XXXdpi ZPL XXXXXXXXXXX Wired..... PRIMARY NETWORK PrintServer..... LOAD LAN FROM? INTERNAL WIRED..... ACTIVE PRINTSRVR Wired* ALL..... IP PROTOCOL 192.168.000.017.... IP ADDRESS 255.255.255.000.... SUBNET 192.168.000.254.... GATEWAY 000.000.000.000.... WINS SERVER IP YES..... TIMEOUT CHECKING 300..... TIMEOUT VALUE 000..... ARP INTERVAL 9100..... BASE RAW PORT 9200..... JSON CONFIG PORT Wireless ALL..... IP PROTOCOL 000.000.000.000.... IP ADDRESS 255.255.255.000.... SUBNET 000.000.000.000.... GATEWAY 000.000.000.000.... WINS SERVER IP YES..... TIMEOUT CHECKING 300..... TIMEOUT VALUE 000..... ARP INTERVAL 9100..... BASE RAW PORT 9200..... JSON CONFIG PORT INSERTED..... CARD INSERTED 02dfH..... CARD MFG ID 9134H..... CARD PRODUCT ID ac:3f:a4:82:05:9c.. MAC ADDRESS YES..... DRIVER INSTALLED INFRASTRUCTURE..... OPERATING MODE 125..... ESSID 1.0..... CURRENT TX RATE OPEN..... WEP TYPE WPA PSK..... WLAN SECURITY 1..... WEP INDEX 000..... POOR SIGNAL LONG..... PREAMBLE NO..... ASSOCIATED ON..... PULSE ENABLED 15..... PULSE RATE OFF..... INTL MODE USA/CANADA..... REGION CODE USA/CANADA..... COUNTRY CODE 0x7FF..... CHANNEL MASK Bluetooth 4.3.1p1..... FIRMWARE 02/13/2015..... DATE on..... DISCOVERABLE 3.0/4.0..... RADIO VERSION on..... ENABLED AC:3F:A4:82:05:9D.. MAC ADDRESS 76J162700886..... FRIENDLY NAME no..... CONNECTED 1..... MIN SECURITY MODE nc..... CONN SECURITY MODE supported..... iOS FIRMWARE IN THIS PRINTER IS COPYRIGHTED

Related ZPL command(s):	~WL
Control panel key(s):	Do one of the following:* • Hold **CANCEL** during printer power-up. (Formerly called a CANCEL self test.) • Hold **FEED** + **CANCEL** for 2 seconds when the printer is in the Ready state.
Printer web page:	**View and Modify Printer Settings** > **Print Listings on Label** *

NOTE: * Prints a printer configuration label and a network configuration label.

Menu Display	Menu Option Description	
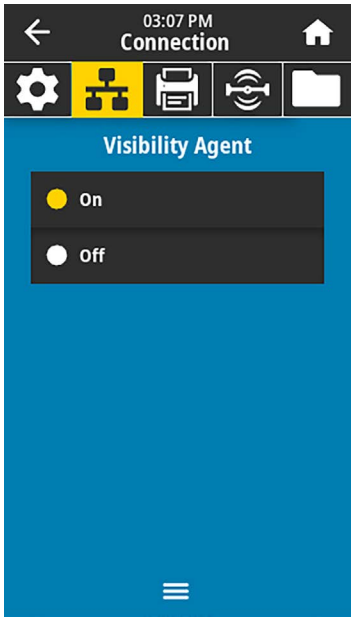	**Connection** > **Networks** > **Visibility Agent** When the printer is connected to a wired or wireless network, it will attempt to connect to Zebra's Asset Visibility Service via the Cloud-based Zebra Printer Connector using an encrypted, certificate-authenticated web socket connection. The printer sends Discovery Data and Settings and Alerts Data. Data printed via any label formats is NOT transmitted. To opt out of this feature, disable this setting. (For more information, see the "Opting Out of the Asset Visibility Agent" application note at zebra.com.)	
	Accepted values:	ON, OFF
	SGD command used:	`weblink.zebra_connector.enable`
	Printer web page:	**View and Modify Printer Settings** > **Network Configuration** > **Cloud Connect Settings**
	**Connection** > **Wired** > **Wired IP Protocol** This parameter indicates if the user (permanent) or the server (dynamic) selects the wired print server's IP address. When a dynamic option is chosen, this parameter tells the method(s) by which this print server receives the IP address from the server. **IMPORTANT:** You must reset the print server to allow changes to the network settings to take effect. (See Connection > Networks > Reset Network.)	
	Accepted values:	ALL, GLEANING ONLY, RARP, BOOTP, DHCP, DHCP & BOOTP, PERMANENT
	Related ZPL command(s):	`^ND`
	SGD command used:	`internal_wired.ip.protocol`
	Printer web page:	**View and Modify Printer Settings** > **Network Communications Setup** > **TCP/IP Settings**

Menu Display	Menu Option Description	
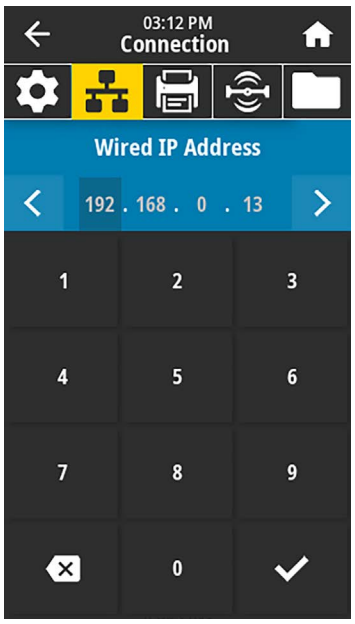	**Connection** > **Wired** > **Wired IP Address** View and, if necessary, change the printer's wired IP address. To save changes to this setting, set Connection > Wired > Wired IP Protocol to **PERMANENT**, and then reset the print server (see Connection > Networks > Reset Network).	
	Accepted values:	000 to 255 for each field
	Related ZPL command(s):	`^ND`
	SGD command used:	`internal_wired.ip.addr`
	Printer web page:	**View and Modify Printer Settings** > **Network Communications Setup** > **TCP/IP Settings**
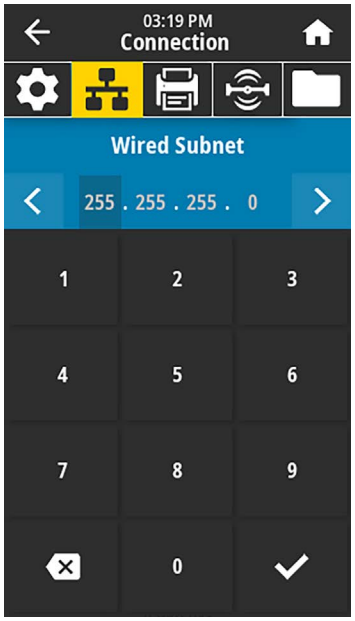	**Connection** > **Wired** > **Wired Subnet** View and, if necessary, change the wired subnet mask. To save changes to this setting, set Connection > Wired > Wired IP Protocol to **PERMANENT**, and then reset the print server (see Connection > Networks > Reset Network).	
	Accepted values:	000 to 255 for each field
	Related ZPL command(s):	`^ND`
	SGD command used:	`internal_wired.ip.netmask`
	Printer web page:	**View and Modify Printer Settings** > **Network Communications Setup** > **TCP/IP Settings**

Menu Display	Menu Option Description	
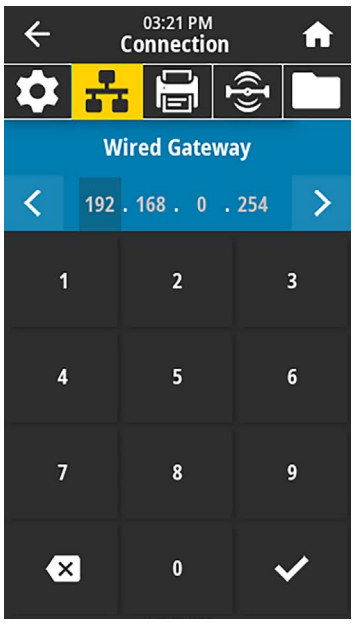	**Connection** > **Wired** > **Wired Gateway** View and, if necessary, change the default wired gateway. To save changes to this setting, set Connection > Wired > Wired IP Protocol to **PERMANENT**, and then reset the print server (see Connection > Networks > Reset Network).	
	Accepted values:	000 to 255 for each field
	Related ZPL command(s):	`^ND`
	SGD command used:	`internal_wired.ip.gateway`
	Printer web page:	**View and Modify Printer Settings** > **Network Communications Setup** > **TCP/IP Settings**
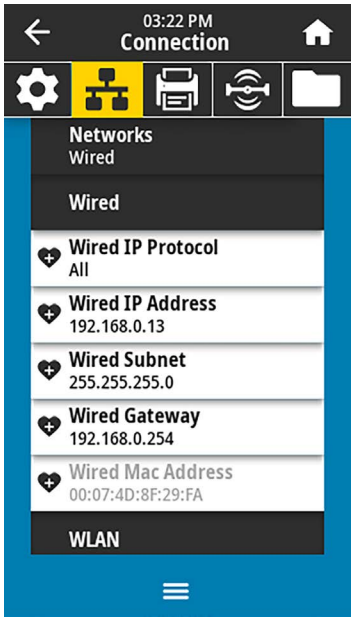	**Connection** > **Wired** > **Wired MAC Address** View the Media Access Control (MAC) address of the wired print server. This value cannot be modified.	
	SGD command used:	`internal_wired.mac_addr`
	Printer web page:	**View and Modify Printer Settings** > **Network Communications Setup** > **TCP/IP Settings**

Menu Display	Menu Option Description
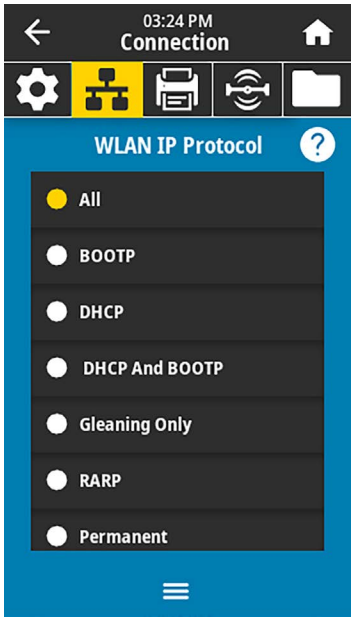	**Connection** > **WLAN** > **WLAN IP Protocol** This parameter indicates if the user (permanent) or the server (dynamic) selects the wireless print server's IP address. When a dynamic option is chosen, this parameter tells the method(s) by which this print server receives the IP address from the server. **NOTE:** You must reset the print server to allow changes to the network settings to take effect. (See Connection > Networks > Reset Network). Accepted values: ALL, GLEANING ONLY, RARP, BOOTP, DHCP, DHCP & BOOTP, PERMANENT Related ZPL command(s): `^ND` SGD command used: `wlan.ip.protocol` Printer web page: **View and Modify Printer Settings** > **Network Communications Setup** > **Wireless Setup**
	**Connection** > **WLAN** > **WLAN IP Address** View and, if necessary, change the printer's wireless IP address. To save changes to this setting, set Connection > WLAN > WLAN IP Protocol to **PERMANENT**, and then reset the print server (see Connection > Networks > Reset Network). Accepted values: 000 to 255 for each field Related ZPL command(s): `^ND` SGD command used: `wlan.ip.addr` Printer web page: **View and Modify Printer Settings** > **Network Communications Setup** > **Wireless Setup**

Menu Display	Menu Option Description	
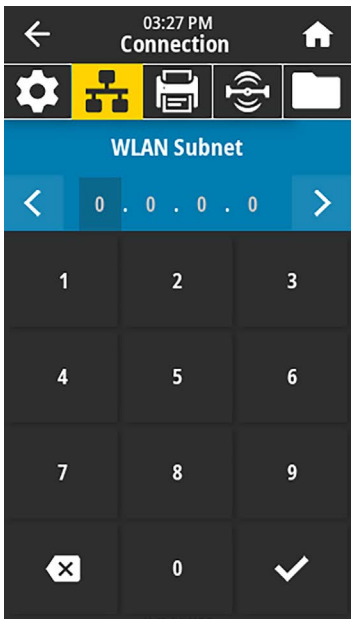	**Connection** > **WLAN** > **WLAN Subnet** View and, if necessary, change the wireless subnet mask. To save changes to this setting, set Connection > WLAN > WLAN IP Protocol to **PERMANENT**, and then reset the print server (see Connection > Networks > Reset Network).	
	Accepted values:	000 to 255 for each field
	Related ZPL command(s):	`^ND`
	SGD command used:	`wlan.ip.netmask`
	Printer web page:	**View and Modify Printer Settings** > **Network Communications Setup** > **Wireless Setup**
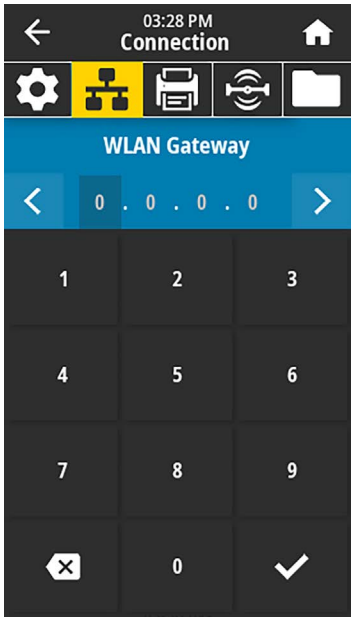	**Connection** > **WLAN** > **WLAN Gateway** View and, if necessary, change the default wireless gateway. To save changes to this setting, set Connection > WLAN > WLAN IP Protocol to **PERMANENT**, and then reset the print server (see Connection > Networks > Reset Network).	
	Accepted values:	000 to 255 for each field
	Related ZPL command(s):	`^ND`
	SGD command used:	`wlan.ip.gateway`
	Printer web page:	**View and Modify Printer Settings** > **Network Communications Setup** > **Wireless Setup**

Menu Display	Menu Option Description	
	**Connection** > **WLAN** > **WLAN MAC Address** View the Media Access Control (MAC) address of the wireless print server. This value cannot be modified.	
	SGD command used:	`wlan.mac_addr`
	Printer web page:	**View and Modify Printer Settings** > **Network Communications Setup** > **Wireless Setup**
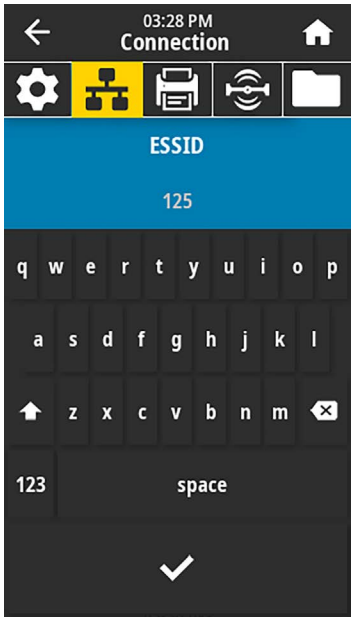	**Connection** > **WLAN** > **ESSID** The Extended Service Set Identification (ESSID) is an identifier for your wireless network. Specify the ESSID for the current wireless configuration.	
	Accepted values:	32-character alphanumeric string (default 125)
	SGD command used:	`wlan.essid`
	Printer web page:	**View and Modify Printer Settings** > **Network Communications Setup** > **Wireless Setup**

Menu Display	Menu Option Description	
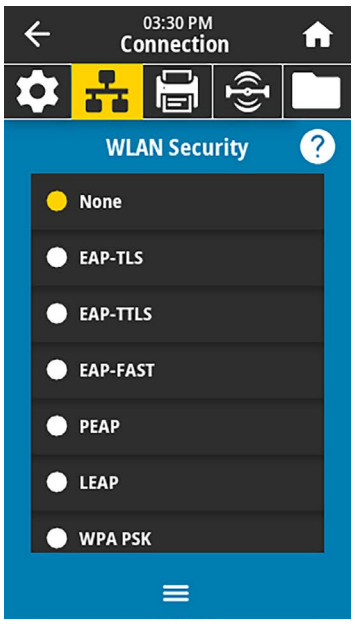	**Connection** > **WLAN** > **WLAN Security** Select the security type being used on your wireless network.	
	Related ZPL command(s):	`^WX`
	SGD command used:	`wlan.security`
	Printer web page:	**View and Modify Printer Settings** > **Network Communications Setup** > **Wireless Encryption Setup**
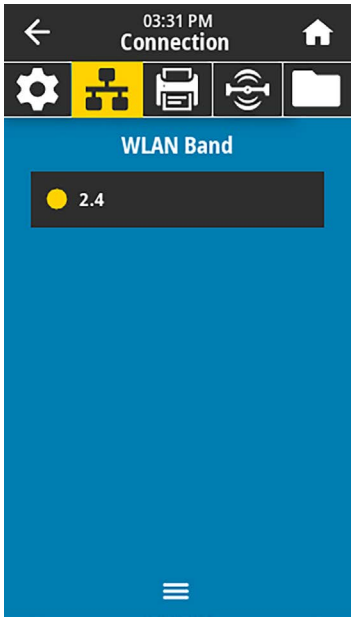	**Connection** > **WLAN** > **WLAN Band** Set a preferred band to connect with via Wi-Fi.	
	Accepted values:	2.4, 5, None
	SGD command used:	`wlan.band_preference`
	Printer web page:	**View and Modify Printer Settings** > **Network Communications** > **Wireless Setup**

<table>
<tr><th>Menu Display</th><th>Menu Option Description</th></tr>
<tr><td>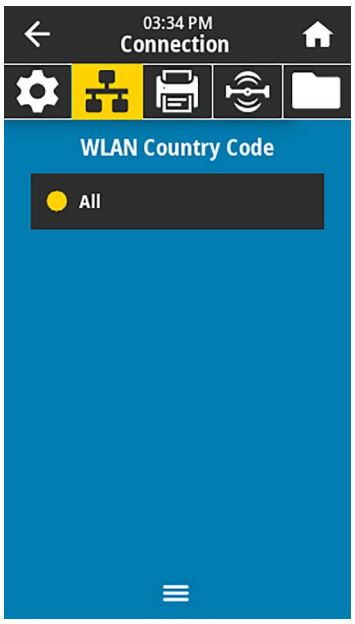
</td><td>
Connection > WLAN > WLAN Country Code
The country code defines the regulatory country for which the wireless radio is currently configured.

IMPORTANT: The list of country codes is specific to each printer and depends on the printer model and its wireless radio configuration. The list is subject to change, addition, or deletion with any firmware update, at any time, without notice.

To determine the country codes available on your printer, issue the <code>! U1 getvar "wlan"</code> command to return all commands related to WLAN settings. Locate the <code>wlan.country.code</code> command in the results and view the country codes available for your printer.
<table>
<tr><td>SGD command used:</td><td><code>wlan.country_code</code></td></tr>
</table>
</td></tr>
<tr><td>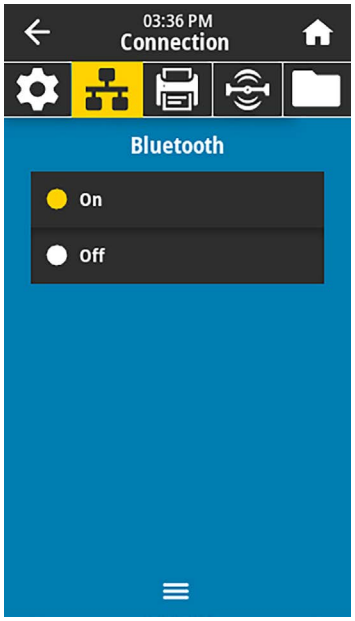
</td><td>
Connection > Bluetooth > Bluetooth
Select if the printer is “Discoverable” for Bluetooth device pairing.
<table>
<tr><td>Accepted values:</td><td>ON—Enables the Bluetooth radio.
OFF—Disables the Bluetooth radio.</td></tr>
<tr><td>SGD command used:</td><td><code>bluetooth.enable</code></td></tr>
</table>
</td></tr>
</table>

Menu Display	Menu Option Description	
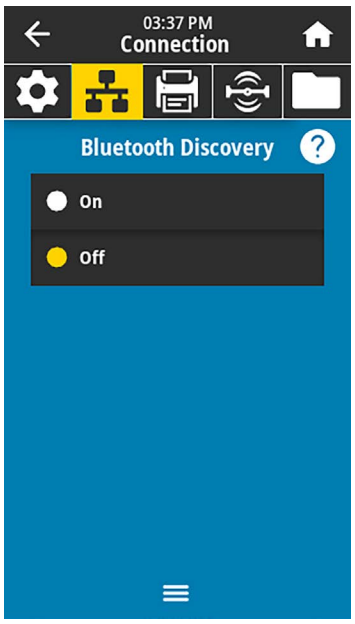	**Connection** > **Bluetooth** > **Bluetooth Discovery** Select if the printer is “Discoverable” for Bluetooth device pairing.	
	Accepted values:	ON—Enables Bluetooth discoverable mode. OFF—Disables Bluetooth discoverable mode.
	SGD command used:	`bluetooth.discoverable`
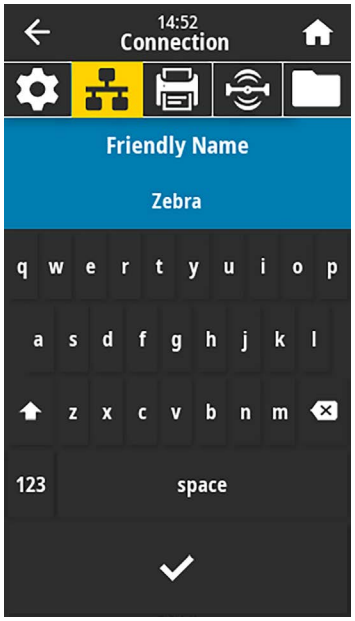	**Connection** > **Bluetooth** > **Friendly Name** This command sets the friendly name, which is used during service discovery. For changes to take effect, you must power cycle the printer or issue the `device.reset` command (see Connection > Networks > Reset Network). If you do not set a friendly name, the setting will default to the printer serial number.	
	Accepted values:	17-character text string
	SGD command used:	`bluetooth.friendly_name`

Menu Display	Menu Option Description	
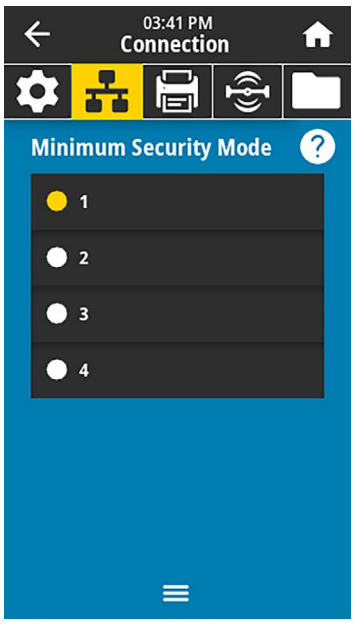	**Connection** > **Bluetooth** > **Minimum Security Mode** This printer setting parameter sets the Bluetooth Minimum Security mode. Minimum Security Mode provides for different levels of security, depending on the printer radio version and printer firmware. See the Zebra Programming Guide at zebra.com/manuals for more information.	
	Accepted values:	1, 2, 3, 4
	SGD command used:	`bluetooth.minimum_security_mode`
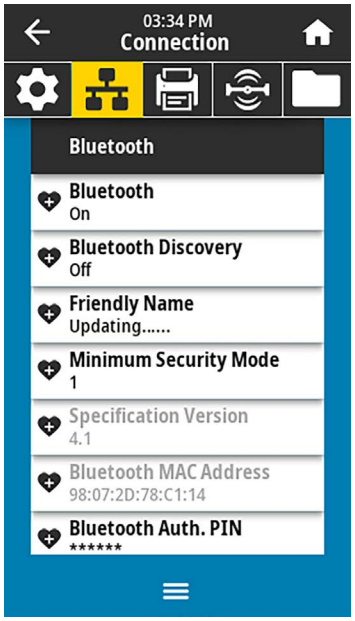	**Connection** > **Bluetooth** > **Specification Version** This parameter displays the Bluetooth library version number.	
	SGD command used:	`bluetooth.version`

<table>
<tr><th>Menu Display</th><th colspan="2">Menu Option Description</th></tr>
<tr><td rowspan="2">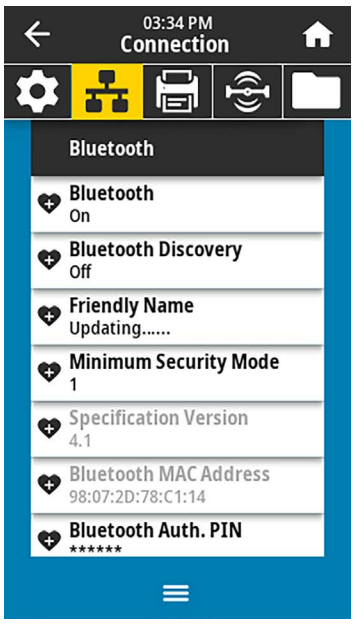
</td><td colspan="2">Connection > Bluetooth > MAC Address
This parameter displays the Bluetooth device address.</td></tr>
<tr><td>SGD command used:</td><td><code>bluetooth.address</code></td></tr>
<tr><td rowspan="2">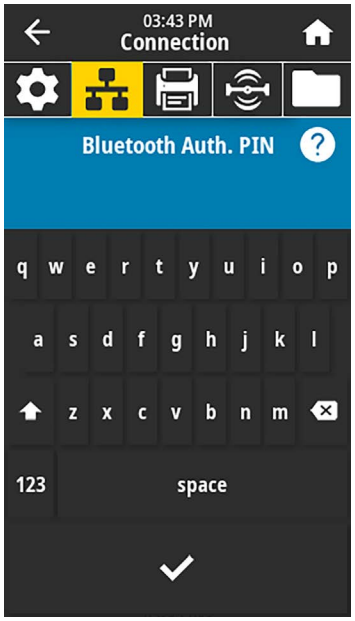
</td><td colspan="2">Connection > Bluetooth > Bluetooth Auth. PIN
Set the PIN used when Bluetooth authentication is enabled.</td></tr>
<tr><td>SGD command used:</td><td><code>bluetooth.bluetooth_pin</code> (to set the PIN)
<code>bluetooth.authentication</code> (to enable authentication)</td></tr>
</table>

Menu Display	Menu Option Description	
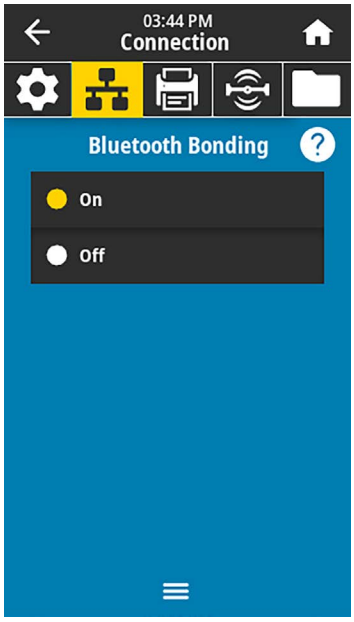	**Connection** > **Bluetooth** > **Bluetooth Bonding** Controls whether the Bluetooth stack will “bond” or save link keys for devices that successfully connect to the printer.	
	Accepted values:	ON—Enables Bluetooth bonding. OFF—Disables Bluetooth bonding.
	SGD command used:	`bluetooth.bonding`

Print Menu

NOTE: if your printer's display does not match the items in this section, update the printer firmware.

Menu Display	Menu Option Description	
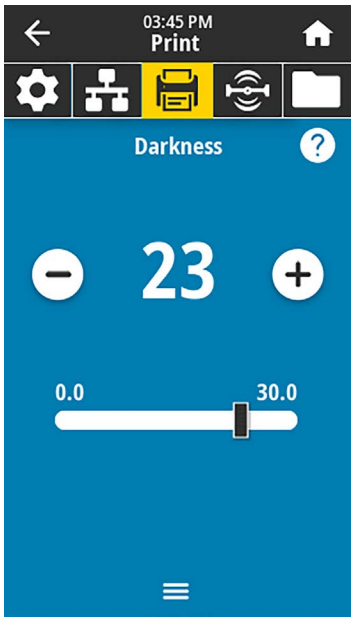	**Print** > **Print Quality** > **Darkness** Set the print darkness to the lowest setting that provides good print quality. If you set the darkness too high, the label image may print unclearly, barcodes may not scan correctly, the ribbon may burn through, or the printhead may wear prematurely.	
	Accepted values:	0.0 to 30.0
	Related ZPL command(s):	`^MD` `~SD`
	SGD command used:	`print.tone`
	Printer web page:	**View and Modify Printer Settings** > **General Setup** > **Darkness**

Menu Display	Menu Option Description	
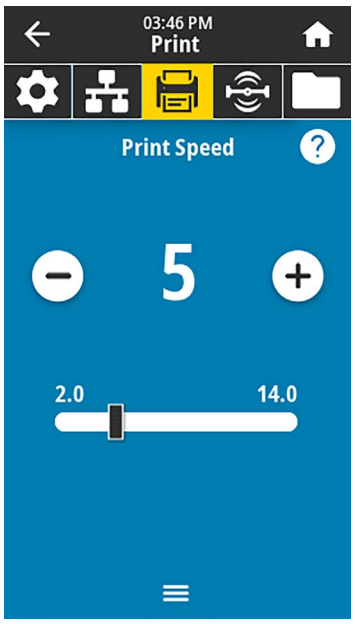	**Print** > **Print Quality** > **Print Speed** Select the speed, in inches per second (ips), for printing a label. Slower print speeds typically yield better print quality.	
	Accepted values:	2 to 6 ips
	Related ZPL command(s):	`^PR`
	SGD command used:	`media.speed`
	Printer web page:	**View and Modify Printer Settings** > **General Setup** > **Print Speed**
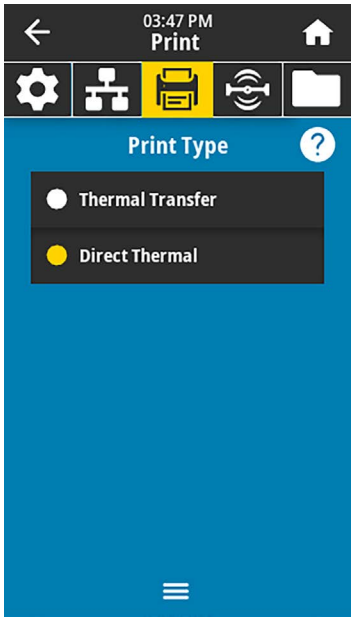	**Print** > **Print Quality** > **Print Type** Specify if the printer needs to use ribbon for printing.	
	Accepted values:	• Thermal Transfer—Uses ribbon and thermal transfer media. • Direct Thermal—Uses direct thermal media and no ribbon.
	Related ZPL command(s):	`^MT`
	SGD command used:	`ezpl.print_method`
	Printer web page:	**View and Modify Printer Settings** > **Media Setup** > **Print Method**

<table>
<tr><th>Menu Display</th><th colspan="2">Menu Option Description</th></tr>
<tr><td rowspan="5">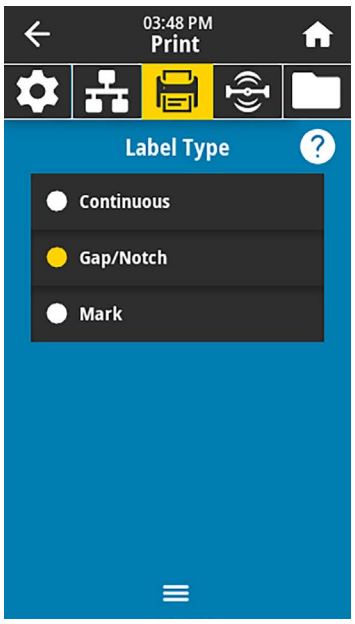
</td><td colspan="2">Print > Print Quality > Label Type
Select the type of media that you are using.</td></tr>
<tr><td>Accepted values:</td><td>Continuous, Gap/Notch, Mark
If you select Continuous, you must include a label length in your label format (<code>^LL</code> if you are using ZPL). If you select Gap/Notch or Mark for various noncontinuous media, the printer feeds media to calculate the label length.</td></tr>
<tr><td>Related ZPL command(s):</td><td><code>^MN</code></td></tr>
<tr><td>SGD command used:</td><td><code>ezpl.media_type</code></td></tr>
<tr><td>Printer web page:</td><td>View and Modify Printer Settings > Media Setup > Media Type</td></tr>
<tr><td rowspan="2">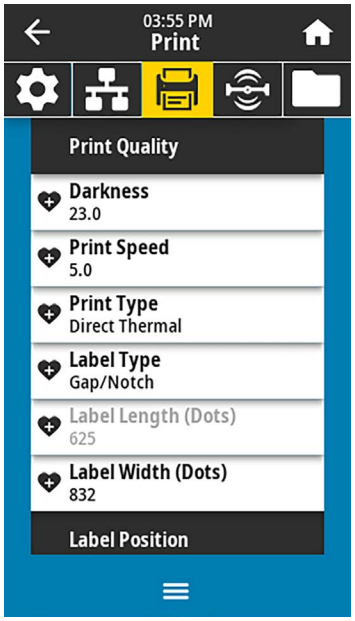
</td><td colspan="2">Print > Print Quality > Label Length
View the calibrated label length in dots.
This value may be modified only under one of these conditions:
• the printer is set for continuous media
• the second parameter of <code>^LL</code> is set to <code>Y</code></td></tr>
<tr><td>Related ZPL command(s):</td><td><code>^LL</code></td></tr>
</table>

Menu Display	Menu Option Description	
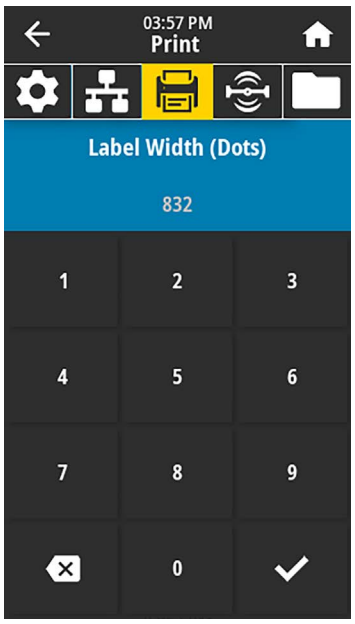	**Print** > **Print Quality** > **Label Width (Dots)** Specify the width of the labels being used, in dots. The default value is the maximum width for the printer, based on the printhead's DPI value.	
	Accepted values:	**NOTE:** Setting the width too narrow can result in portions of a label format not being printed on the media. Setting the width too wide wastes formatting memory and can cause the printer to print beyond the label and onto the platen roller. This setting can affect the horizontal position of the label format if the image was inverted using the `^POI` ZPL II command. ZT411 203 dpi = 0002 to 832 ZT411 300 dpi = 0002 to 1248 ZT411 600 dpi = 0002 to 2496 ZT421 203 dpi = 0002 to 1344 ZT421 300 dpi = 0002 to 1984
	Related ZPL command(s):	`^PW`
	SGD command used:	`ezpl.print_width`
	Printer web page:	**View and Modify Printer Settings** > **Media Setup** > **Print Width**
	**Print** > **Image Adjust** > **Media Handling** Select a media handling method that is compatible with the options available on your printer.	
	Accepted values:	Tear Off, Peel Off, Rewind, Cutter, Delayed Cut, Linerless Peel, Linerless Rewind, Linerless Tear, Applicator, Linerless Cut, Linerless Delayed Cut
	Related ZPL command(s):	`^MM`
	SGD command used:	`media.printmode`
	Printer web page:	**View and Modify Printer Settings** > **General Setup** > **Print Mode**

Menu Display	Menu Option Description
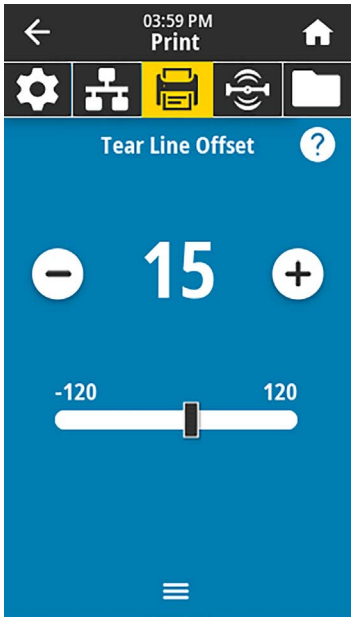	**Print** > **Image Adjust** > **Tear Line Offset** If necessary, shift the position of the media over the tear-off bar after printing. • Lower numbers move the media into the printer by the specified number of dots (the tear line moves closer to the edge of the label just printed). • Higher numbers move the media out of the printer (the tear line moves closer to the leading edge of the next label). 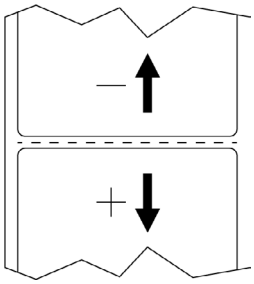

Accepted values:	–120 to +120
Related ZPL command(s):	`~TA`
SGD command used:	`ezpl.tear_off`
Printer web page:	**View and Modify Printer Settings** > **General Setup** > **Tear Off**

Menu Display	Menu Option Description
	**Print** > **Image Adjust** > **Horizontal Label Offset** If necessary, shift the position of the image horizontally on the label. • Negative numbers move the left edge of the image toward the left edge of the label by the number of dots selected. • Positive numbers move the edge of the image toward the right edge of the label. 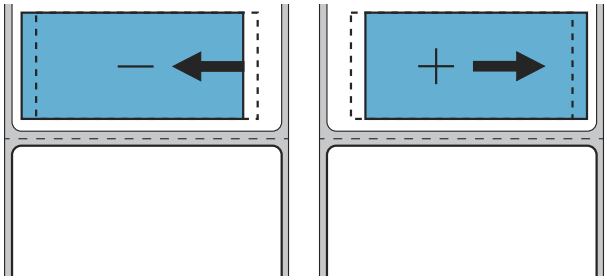
	Accepted values: –9999 to 9999
	Related ZPL command(s): `^LS`
	SGD command used: `zpl.left_position`
	Printer web page: **View and Modify Printer Settings** > **Advanced Setup** > **Left Position**
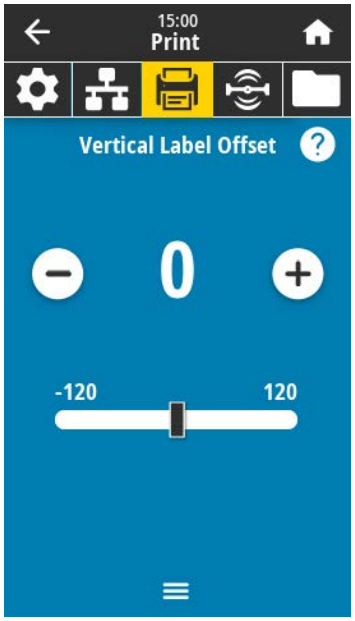	**Print** > **Image Adjust** > **Vertical Label Offset** If necessary, shift the position of the image vertically on the label. • Lower numbers move the image higher on the label (toward the printhead). • Higher numbers move the image farther down on the label (away from the printhead) by the specified number of dots. 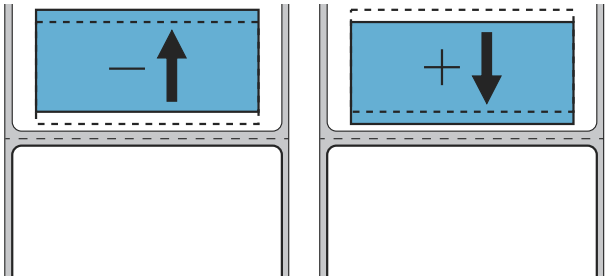
	Accepted values: –120 to +120
	Related ZPL command(s): `^LT`

Menu Display	Menu Option Description	
	SGD command used:	`zpl.label_top`
	Printer web page:	**View and Modify Printer Settings** > **General Setup** > **Label Top**
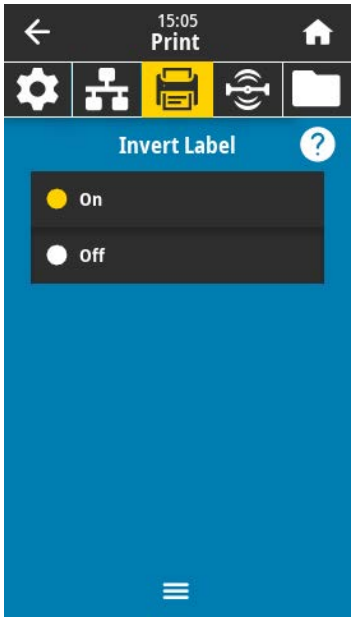	**Print** > **Image Adjust** > **Invert Label** When this is on, the label orientation is inverted.	
	Accepted values:	On, Off
	Related ZPL command(s):	`^PO`
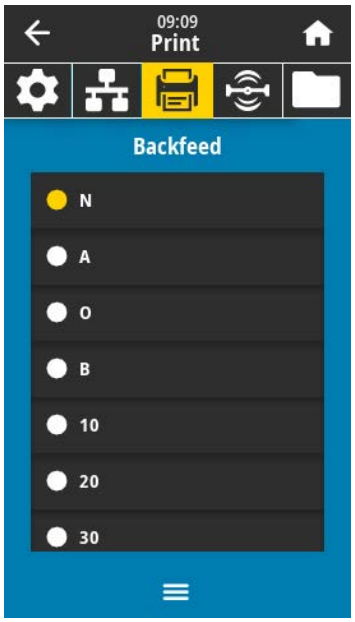	**Print** > **Image Adjust** > **Backfeed** Specify the backfeed order in relation to printing	
	Accepted values:	N = normal — 90 percent backfeed after label is printed A = 100 percent backfeed after printing and cutting O = off — turn backfeed off completely B = 0 percent backfeed after printing and cutting, and 100 percent before printing the next label 10 to 90 = percentage value
	Related ZPL command(s):	`~JS`

<table>
<tr><th>Menu Display</th><th colspan="2">Menu Option Description</th></tr>
<tr><td rowspan="4">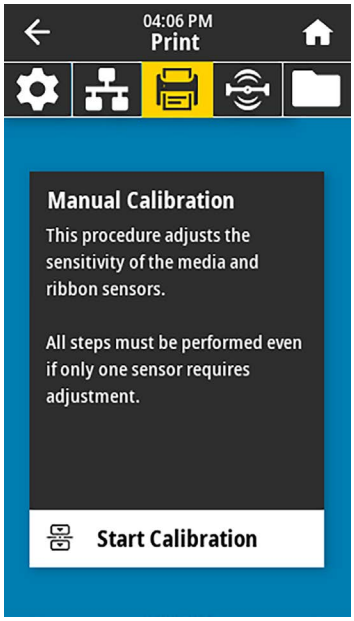
</td><td colspan="2">Print > Sensors > Manual Calibration
Calibrate the printer to adjust the sensitivity of the media and ribbon sensors.
For complete instructions on how to perform a calibration procedure, see Calibrating the Ribbon and Media Sensors on page 131.</td></tr>
<tr><td>Related ZPL command(s):</td><td>~JC</td></tr>
<tr><td>SGD command used:</td><td>ezpl.manual_calibration</td></tr>
<tr><td>Control panel key(s):</td><td>Hold PAUSE + FEED + CANCEL for 2 seconds to initiate calibration.</td></tr>
<tr><td>Printer web page:</td><td colspan="2">The calibration procedure cannot be initiated through the web pages. See the following web page for settings that are set during sensor calibration:
View and Modify Printer Settings > Calibration
IMPORTANT: Do not change these settings unless you are told to do so by Zebra Technical Support or by an authorized service technician.</td></tr>
<tr><td rowspan="4">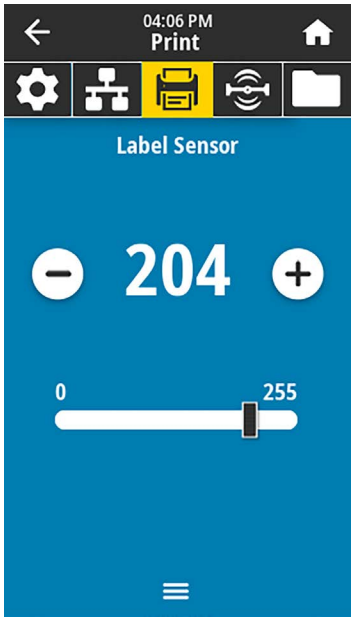
</td><td colspan="2">Print > Sensors > Label Sensor
Set the sensitivity of the label sensor.
IMPORTANT: This value is set during sensor calibration. Do not change these settings unless you are told to do so by Zebra Technical Support or by an authorized service technician.</td></tr>
<tr><td>Accepted values:</td><td>0 to 255</td></tr>
<tr><td>SGD command used:</td><td>ezpl.label_sensor</td></tr>
<tr><td>Printer web page:</td><td>View and Modify Printer Settings > Calibration</td></tr>
</table>

<table>
<tr><th>Menu Display</th><th colspan="2">Menu Option Description</th></tr>
<tr><td rowspan="5">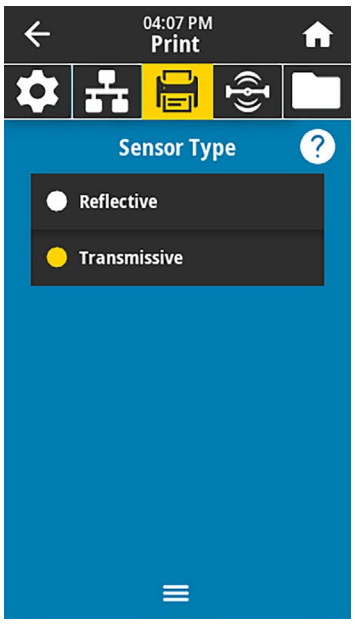
</td><td colspan="2">Print > Sensors > Sensor Type
Select the media sensor that is appropriate for the media that you are using. The reflective sensor typically is used for black mark media. The transmissive sensor is typically used for other media types.</td></tr>
<tr><td>Accepted values:</td><td>TRANSMISSIVE, REFLECTIVE</td></tr>
<tr><td>Related ZPL command(s):</td><td>^JS</td></tr>
<tr><td>SGD command used:</td><td>device.sensor_select</td></tr>
<tr><td>Printer web page:</td><td>View and Modify Printer Settings > Media Setup</td></tr>
<tr><td rowspan="4">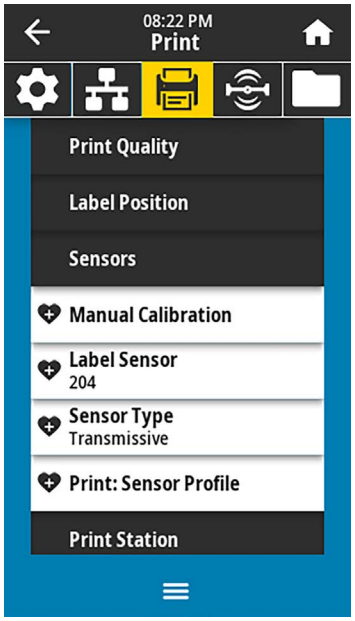
</td><td colspan="2">Print > Sensors > Print: Sensor Profile
Shows the sensor settings compared to actual sensor readings. To interpret the results, see Sensor Profile on page 164.</td></tr>
<tr><td>Related ZPL command(s):</td><td>~JG</td></tr>
<tr><td>Control panel key(s):</td><td>Hold FEED + CANCEL during printer power-up.</td></tr>
<tr><td>Printer web page:</td><td>View and Modify Printer Settings > Print Listings on Label ></td></tr>
</table>

<table>
<tr><th>Menu Display</th><th>Menu Option Description</th></tr>
<tr><td rowspan="2">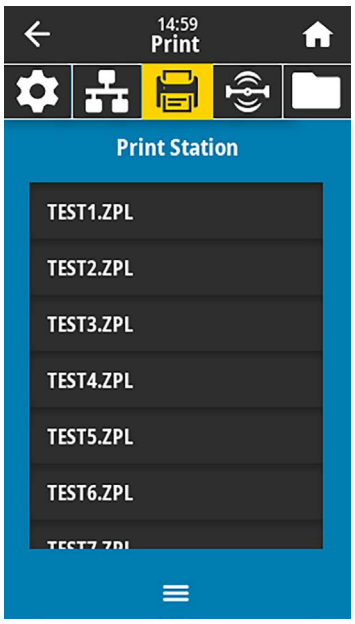
</td><td>Print > Print Station

Use this menu item to fill in variable fields in a label format and print the label using a Human Input Device (HID), such as a USB keyboard, scale, or barcode scanner. A suitable label format must be stored on the E: drive of the printer to use this option. See the exercises in Using a USB Host Port and the Print Touch Feature on page 198 for an exercise using this capability.

When you plug an HID into one of the printer's USB host ports, use this user menu to select a form on the printer's E: drive. After you have been prompted to fill in each variable <code>^FN</code> field on the form, you can specify the desired quantity of labels to print.

For more information about using the <code>^FN</code> command or the SGD commands related to this feature, see the Zebra Programming Guide at zebra.com/manuals for more information.

NOTE: This menu item can be used only if a USB device is connected to a USB host port on the printer.</td></tr>
<tr><td>SGD command used:</td><td><code>usb.host.keyboard_input</code>
(must be set to ON)
<code>usb.host.template_list</code>
<code>usb.host.fn_field_list</code>
<code>usb.host.fn_field_data</code>
<code>usb.host.fn_last_field</code>
<code>usb.host.template_print_amount</code></td></tr>
<tr><td rowspan="4">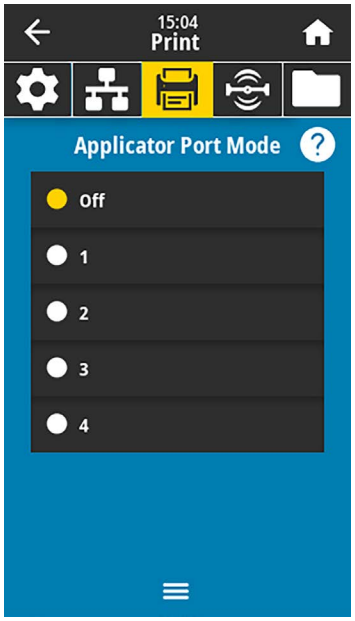
</td><td colspan="2">Print > Applicator > Applicator Port Mode

Controls the way in which the applicator port's "End Print" signal functions.</td></tr>
<tr><td>Accepted values:</td><td>Off

1 = End Print signal normally high, and low only when the printer is moving the label forward.

2 = End Print signal normally low, and high only when the printer is moving the label forward.

3 = End Print signal normally high, and low for 20 ms when a label has been printed and positioned.

4 = End Print signal normally low, and high for 20 ms when a label has been printed and positioned.</td></tr>
<tr><td>Related ZPL command(s):</td><td><code>^JJ</code></td></tr>
<tr><td>SGD command used:</td><td><code>device.applicator.end_print</code></td></tr>
</table>

Menu Display	Menu Option Description	
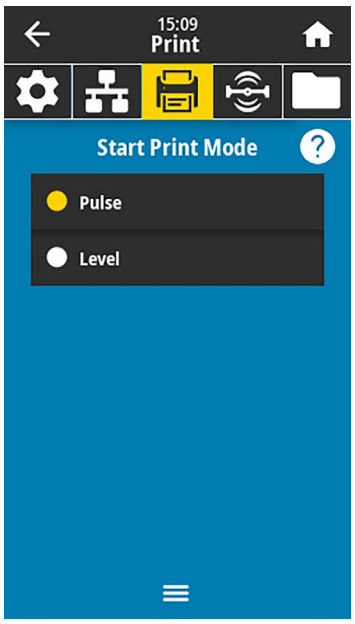	**Print** > **Applicator** > **Start Print Mode** Determines if the applicator port's "Start Print" signal is in level mode or pulse mode.	
	Accepted values:	Pulse—Start Print signal must be deasserted before it can be asserted for the next label. Level—Start Print signal does not need to be deasserted to print the next label. As long as the Start Print signal is low and a label is formatted, a label prints.
	Related ZPL command(s):	`^JJ`
	SGD command used:	`device.applicator.start_print`
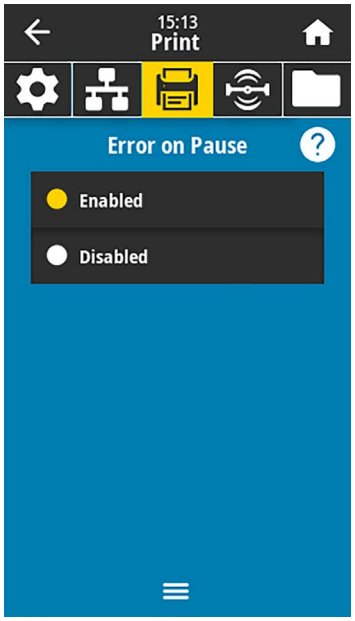	**Print** > **Applicator** > **Error on Pause** Determines how applicator port errors are treated by the printer. Enabling this feature also causes the "Service Required" pin to be asserted.	
	Accepted values:	ENABLED, DISABLED
	SGD command used:	`device.applicator.error_on_pause`
	Printer web page:	**View and Modify Printer Settings** > **Advanced Setup** > **Error on Pause**

Menu Display	Menu Option Description	
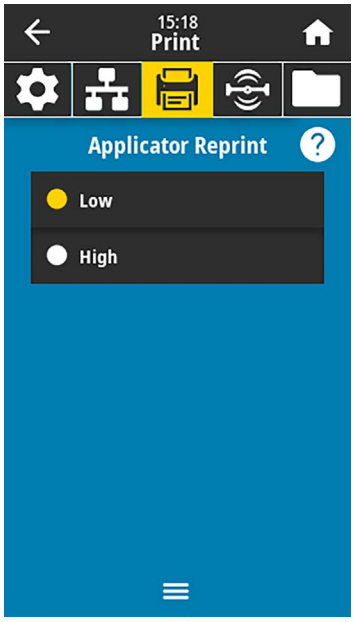	**Print** > **Applicator** > **Applicator Reprint** Specifies if a high or low value is required for an applicator to reprint a label. Enables or disables the ~PR command, which when enabled reprints the last printed label. It also enables the Reprint button on the Home screen.	
	Related ZPL command(s):	^JJ and ~PR
	SGD command used:	device.applicator.reprint

RFID Menu

Menu Display	Menu Option Description	
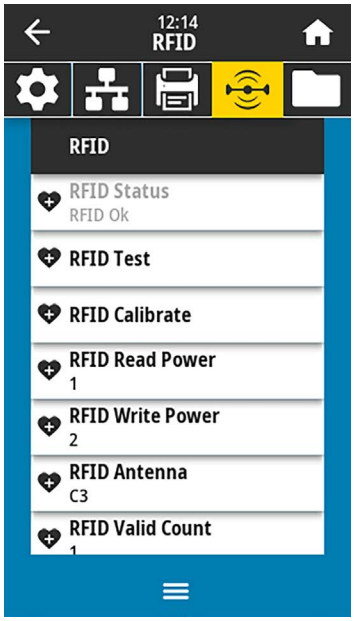	**RFID** > **RFID Status** Display the status of the RFID subsystem of the printer.	
	Related ZPL command(s):	^HL or ~HL
	SGD command used:	rfid.error.response

Menu Display	Menu Option Description
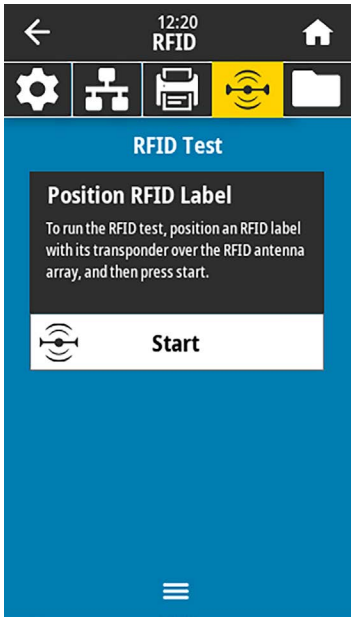	**RFID** > **RFID Test** During the RFID test, the printer attempts to read and write to a transponder. No printer movement occurs with this test. To test an RFID label: **1.** Position the RFID label with its transponder over the RFID antenna array. **2.** Touch **Start** . The results of the test appear on the display. 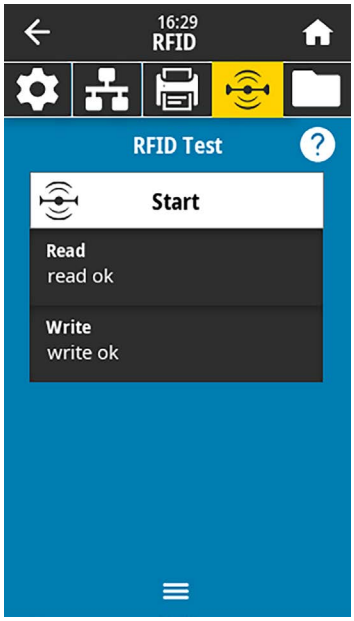
	SGD command used: `rfid.tag.test.content` and `rfid.tag.test.execute`

Menu Display	Menu Option Description
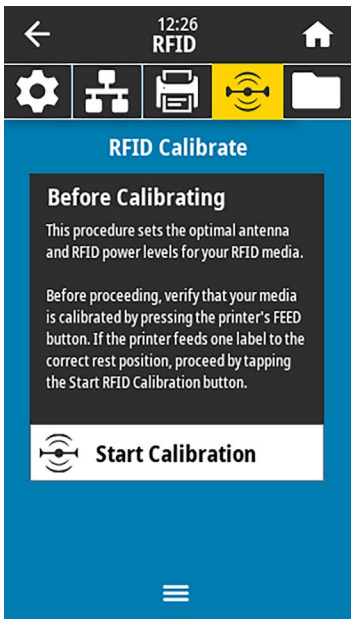	**RFID** > **RFID Calibrate** Initiate tag calibration for RFID media. (This is not the same as media and ribbon calibration.) During the process, the printer moves the media, calibrates the RFID tag position, and determines the optimal settings for the RFID media being used. These settings include the programming position, the antenna element to use, and the read/write power level to use. (See RFID Programming Guide 3 for more information.) **NOTE:** Before running this command, load the printer with RFID media, calibrate your printer, close the printhead, and feed at least one label to make sure that tag calibration will begin from the correct position. Leave all transponders before and after the tag that is being calibrated. This allows the printer to determine RFID settings which do not encode the adjacent tag. Allow a portion of media to extend out the front of the printer to allow for backfeed during the tag calibration procedure.
	Related ZPL command(s): `^HR`
	SGD command used: `rfid.tag.calibrate`
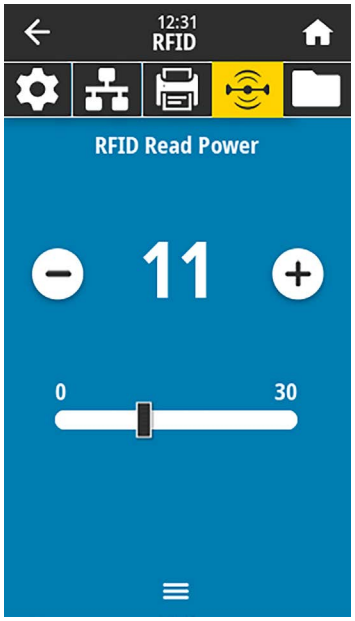	**RFID** > **Read Power** If the desired read power is not achieved through RFID tag calibration, a value may be specified.
	Accepted values: 0 to 30
	Related ZPL command(s): `^RW`
	SGD command used: `rfid.reader_1.power.read`
	Printer web page: **View and Modify Printer Settings** > **RFID Setup** > **RFID READ PWR**

Menu Display	Menu Option Description	
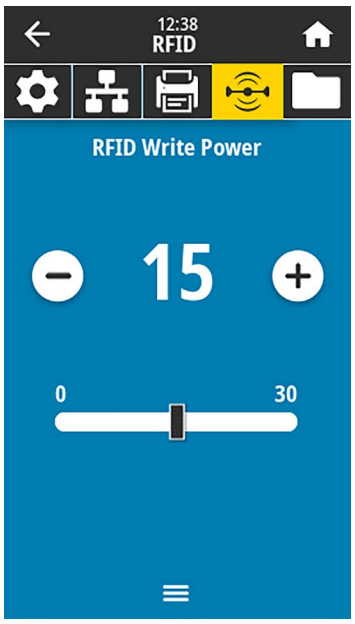	**RFID** > **RFID Write Power** If the desired write power is not achieved through RFID tag calibration, a value may be specified.	
	Accepted values:	0 to 30
	Related ZPL command(s):	`^RW`
	SGD command used:	`rfid.reader_1.power.write`
	Printer web page:	**View and Modify Printer Settings** > **RFID Setup** > **RFID WRITE PWR**
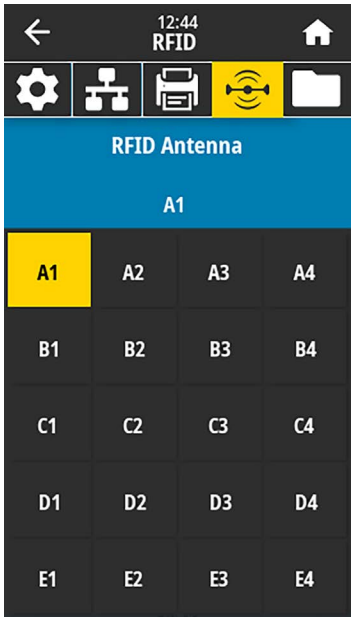	**RFID** > **RFID Antenna** If the desired antenna is not achieved through RFID tag calibration, a value may be specified.	
	Accepted values:	A1, A2, A3, A4 B1, B2, B3, B4 C1, C2, C3, C4 D1, D2, D3, D4 E1, E2, E3, E4
	Related ZPL command(s):	`^RW`
	SGD command used:	`rfid.reader_1.antenna_port`
	Printer web page:	**View and Modify Printer Settings** > **RFID Setup** > **RFID ANTENNA**

Menu Display	Menu Option Description	
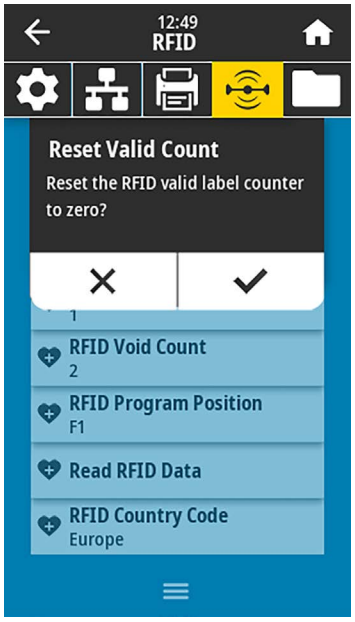	**RFID** > **RFID Valid Count** Resets the RFID valid label counter to zero.	
	Related ZPL command(s):	~RO
	SGD command used:	odometer.rfid.valid_resettable
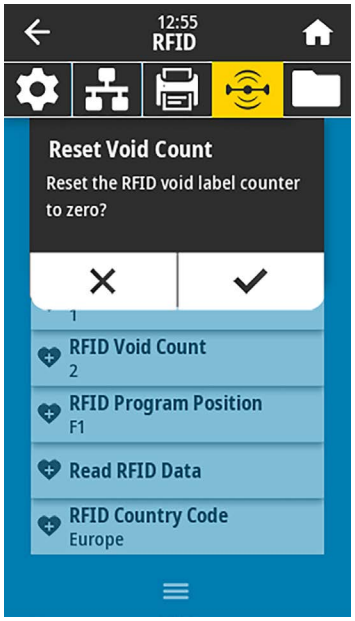	**RFID** > **RFID Void Count** Resets the RFID void label counter to zero.	
	Related ZPL command(s):	~RO
	SGD command used:	odometer.rfid.void_resettable

Menu Display	Menu Option Description	
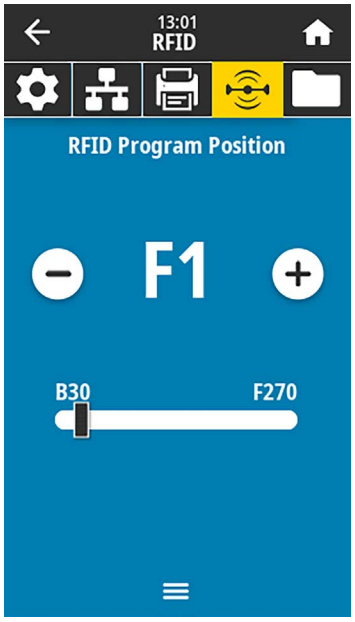	**RFID** > **RFID Program Position** If the desired programming position (read/write position) is not achieved through RFID tag calibration, a value may be specified.	
	Accepted values:	F0 to Fxxx (where xxx is the label length in millimeters or 999, whichever is less)—The printer feeds the label forward for the specified distance and then begins programming. B0 to B30—The printer backfeeds the label for the specified distance and then begins programming. To account for the backfeed, allow empty media liner to extend out of the front of the printer when using a backward programming position.
	Related ZPL command(s):	`^RS`
	SGD command used:	`rfid.position.program`
	Printer web page:	**View and Modify Printer Settings** > **RFID Setup** > **PROGRAM POSITION**

Menu Display	Menu Option Description
	**RFID** > **Read RFID Data** Read and return the specified tag data from the RFID tag located over the RFID antenna. No printer movement occurs while tag data is being read. The printhead can be open or closed. To read and display the information stored on an RFID tag: **1.** Position the RFID label with its transponder over the RFID antenna. **2.** Touch **Read RFID Data**. The results of the test are shown on the display. 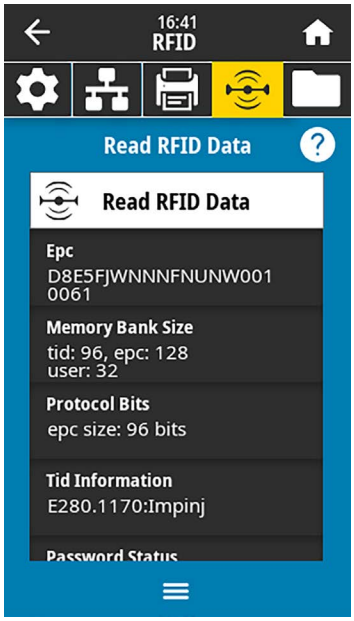
	Related ZPL command(s): `^RF`
	SGD command used: `rfid.tag.read.content` `rfid.tag.read.execute`

Storage Menu

<table>
<tr><th>Menu Display</th><th colspan="2">Menu Option Description</th></tr>
<tr><td rowspan="2">
</td><td colspan="2">Storage > USB > Copy: Files to USB
Select files from the printer to store on a USB Flash drive.
To copy files from the printer to a USB Flash drive:
1. Insert a USB flash drive into the printer’s USB host port.
The printer lists available files.
2. Touch the box next to the desired files. Select All is also available.
3. Touch the checkmark to copy the selected files.</td></tr>
<tr><td>SGD command used:</td><td><code>usb.host.write_list</code></td></tr>
<tr><td rowspan="2">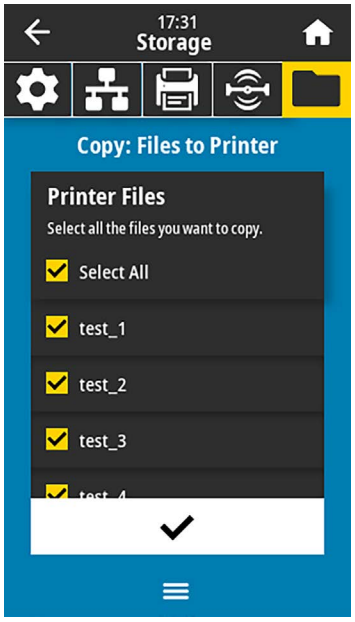
</td><td colspan="2">Storage > USB > Copy: Files to Printer
Select files to copy to the printer from a USB Flash drive.
To copy files to the printer from a USB Flash drive:
1. Insert a USB flash drive into the printer’s USB host port.
The printer lists available files.
2. Touch the box next to the desired files. Select All is also available.
3. Touch the check mark to copy the selected files.</td></tr>
<tr><td>SGD command used:</td><td><code>usb.host.read_list</code></td></tr>
</table>

<table>
<tr><th>Menu Display</th><th colspan="2">Menu Option Description</th></tr>
<tr><td rowspan="3">
</td><td colspan="2">Storage > USB > Copy: Configuration to USB
Use this function to copy the printer's configuration information to a USB mass storage device, such as a USB Flash drive, that is plugged into one of the printer's USB host ports. This makes the information accessible without having to print physical labels.</td></tr>
<tr><td>Related ZPL command(s):</td><td>^HH—Returns the printer configuration information returned to the host computer.</td></tr>
<tr><td>Printer web page:</td><td>Printer Home Page > View Printer Configuration
(to view printer configuration information on your web browser)
View and Modify Printer Settings > Print Listings on Label
(to print the configuration information on labels)</td></tr>
<tr><td rowspan="2">
</td><td colspan="2">Storage > USB > Print: From USB
Select files to print from a USB Flash drive.
To print files from a USB Flash drive:
1. Insert a USB flash drive into the printer's USB host port.
The printer lists available files.
2. Touch the box next to the desired files. Select All is also available.
3. Touch the check mark to print the selected files.</td></tr>
<tr><td>SGD command used:</td><td><code>usb.host.read_list</code></td></tr>
</table>

Menu Display	Menu Option Description	
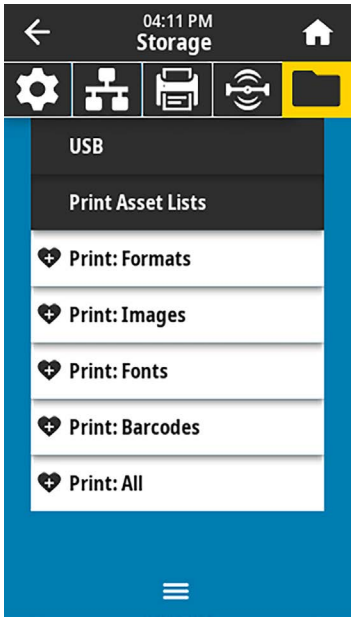	**Storage** > **Print Asset Lists** Print the specified information on one or more labels.	
	Accepted values:	Formats—Prints the available formats stored in the printer's RAM, Flash memory, or optional memory card. Images—Prints the available images stored in the printer's RAM, Flash memory, or optional memory card. Fonts—Prints the available fonts in the printer, including standard printer fonts plus any optional fonts. Fonts may be stored in RAM or Flash memory. Barcodes—Prints the available barcodes in the printer. Barcodes may be stored in RAM or Flash memory. All—Prints the previous labels plus the printer configuration label and the network configuration label.
	Related ZPL command(s):	`^WD`
	Printer web page:	**View and Modify Printer Settings** > **Print Listings on Label**
	**Storage** > **Print from E:** Print one or more files stored on the printer.	

Calibrating the Ribbon and Media Sensors

Printer calibration adjusts the sensitivity of the media and ribbon sensors. It also helps ensure proper alignment of the image being printed and optimal print quality.

Perform calibration in the following situations:

- You switched to a different size or type of ribbon or media.
- The printer experiences any of the following issues:
  - Skips labels.
  - The printed image wanders or drifts side to side or up and down.
  - Ribbon is not being detected either when it is installed or when it runs out.
  - Non-continuous labels are being treated as continuous labels.

Performing Auto Calibration

You can set the printer to perform an auto calibration (`CALIBRATE`) or a short calibration (`SHORT CAL`) using the `POWER UP ACTION` or `HEAD CLOSE ACTION` parameters.

- `CALIBRATE`—Adjusts sensor levels and thresholds, determines the label length, and feeds the media to the next web.
- `SHORT CAL`—Sets the media and web thresholds without adjusting sensor gain, determines the label length, and feeds the media to the next web.

Performing Manual Sensor Calibration

You may need to manually calibrate the printer if you see issues with the print output.

IMPORTANT: When performing manual calibration with a linerless cutter, remove any media that extends out of the cutter. Leaving any media sticking out can block the label taken sensor (1), so calibration will fail.

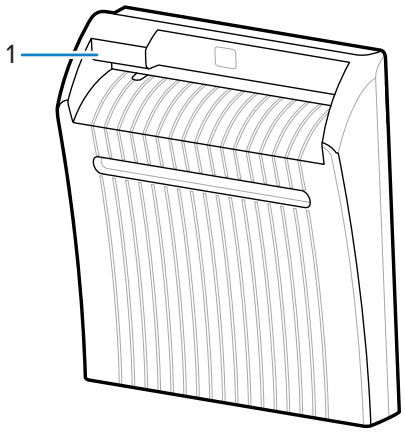

During the calibration sequence, when you are prompted to remove labels from the backing and to move the backing under the sensor, simply remove the linerless media from the media path and close the printhead assembly.

1. Touch **Print** > **Sensors** > **Manual Calibration**.

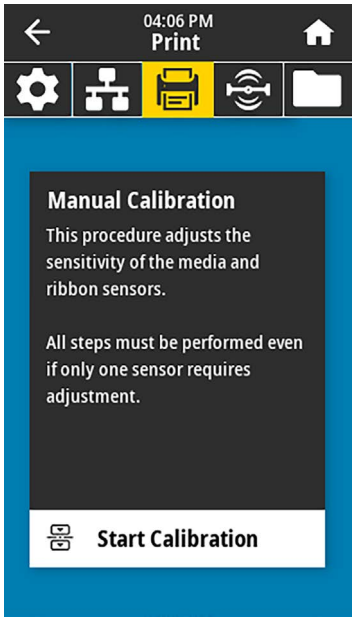

2. Touch **Start Calibration**.
3. Follow the steps in the calibration procedure as prompted.

IMPORTANT: Follow the calibration procedure exactly as presented.

- Touch **Next** to advance to the next prompt.
- You may press and hold **CANCEL** on the control panel at any step in the procedure to cancel the calibration process.

4. When calibration is complete, press **PAUSE** to exit pause mode and enable printing.

Adjusting the Printhead Pressure

You may need to adjust printhead pressure if:

- printing is too light on one side
- you use thick media, or
- if the media drifts from side to side during printing

Use the inside and outside printhead pressure adjustment dials to set the printhead pressure. Set the pressure to the lowest level necessary to achieve good print quality. The setting marks on these dials range from 1 to 4.

Figure 3 Printhead Pressure Adjustment Dials

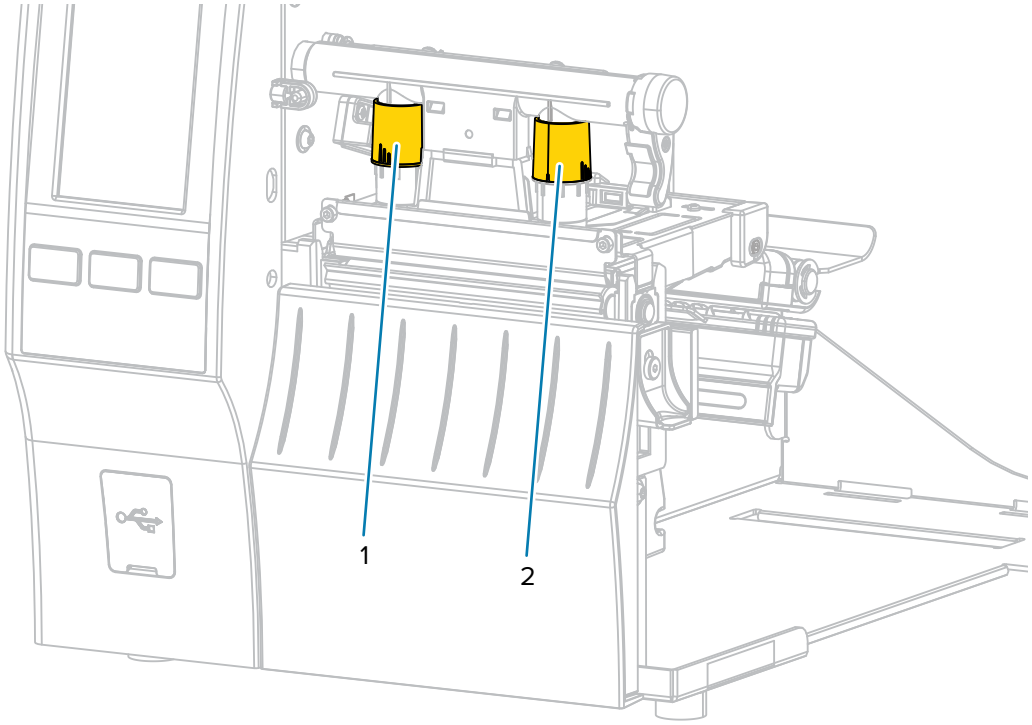

Begin with the pressure settings for your printer model and media width as specified in the following table, and make adjustments to the inside dial (1) and the outside dial (2) as necessary.

Table 3 Pressure Setting Starting Points

Printer	Media Width	Inside Dial Setting	Outside Dial Setting
ZT411	1 in. (25 mm)	4	1
	2 in. (51 mm)	3	1
	3 in. (76 mm)	2.5	1.5
	≥ 3.5 in. (89 mm)	2	2
ZT421	2 in. (51 mm)	4	1
	3 in. (76 mm)	3.5	1
	4 in. (102 mm)	3	2
	≥ 5 in. (127 mm)	2.5	2.5

If necessary, adjust the printhead pressure adjustment dials as follows:

If the media...	Then...
Requires higher pressure to print well	Increase both dials one position. 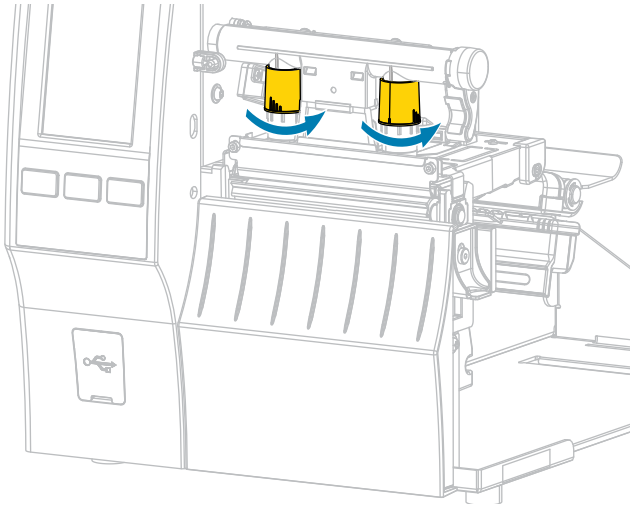
Prints too lightly on the left side of the label.	Increase the inside dial setting one position. 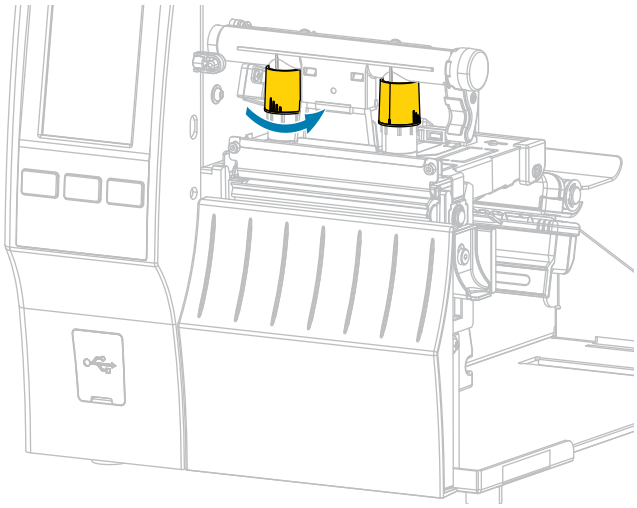

If the media...	Then...
Prints too lightly on the right side of the label.	Increase the outside dial setting one position. 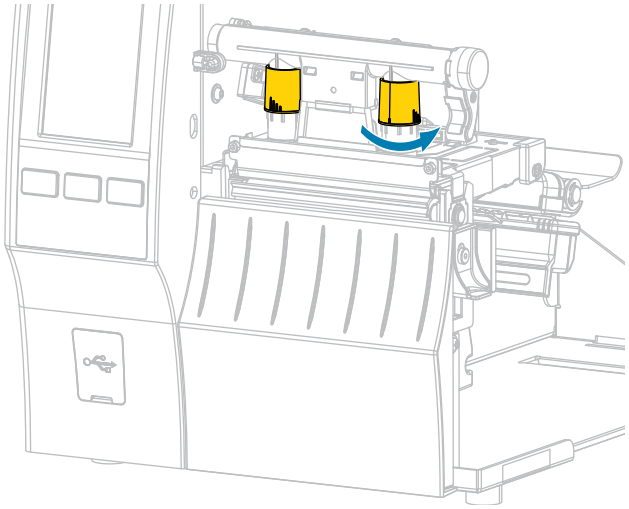

If the media...	Then...
Shifts left while printing	Increase the outside dial setting one position. 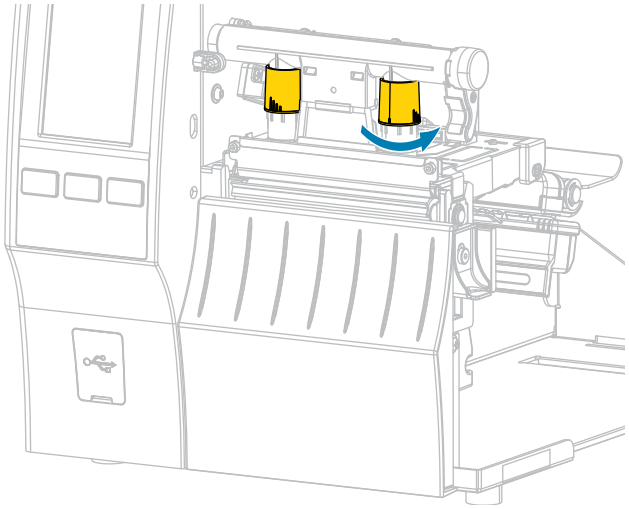 OR Decrease the inside dial setting one position. 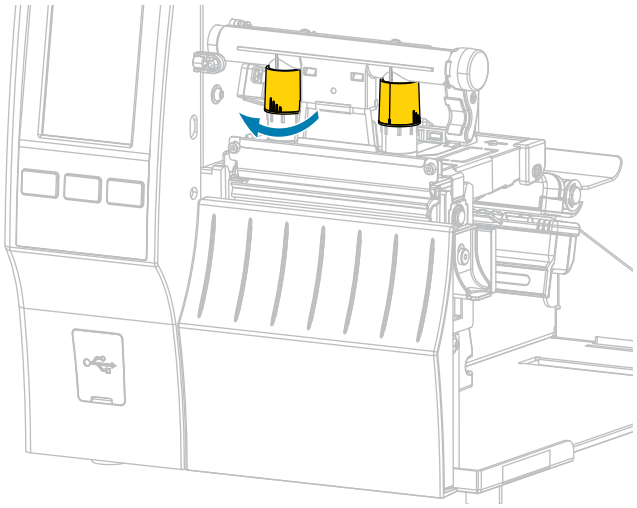

If the media...	Then...
Shifts right while printing	Increase the inside dial setting one position. 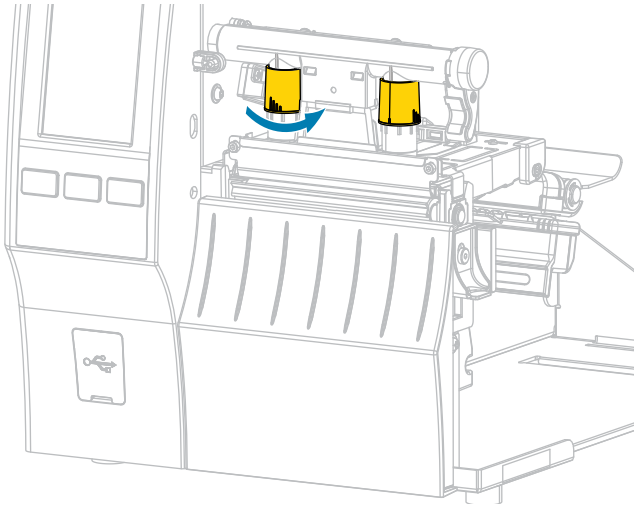 OR Decrease the outside dial setting one position. 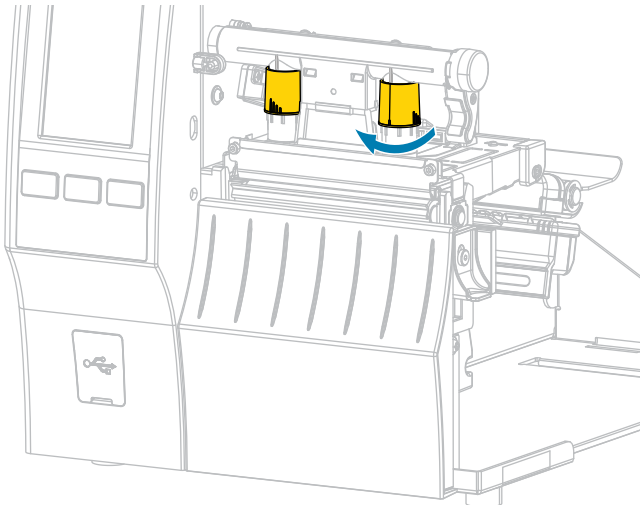

Adjusting the Sensor Position

The transmissive media sensor assembly consists of two parts:

- Light source (lower part of the media sensor)
- Light sensor (upper part of the media sensor)

The media passes between these two parts.

Adjust the position of the sensor only if the printer cannot detect the top of the labels. If that occurs, the printer display shows a "media out error" despite media being loaded.

For non-continuous media with a notch or hole, the sensor must be positioned directly at the notch or hole.

1. Remove the ribbon so you can clearly see the media path.

2. Load the media so that the green light from the media sensor is shining through a gap, notch, or hole.

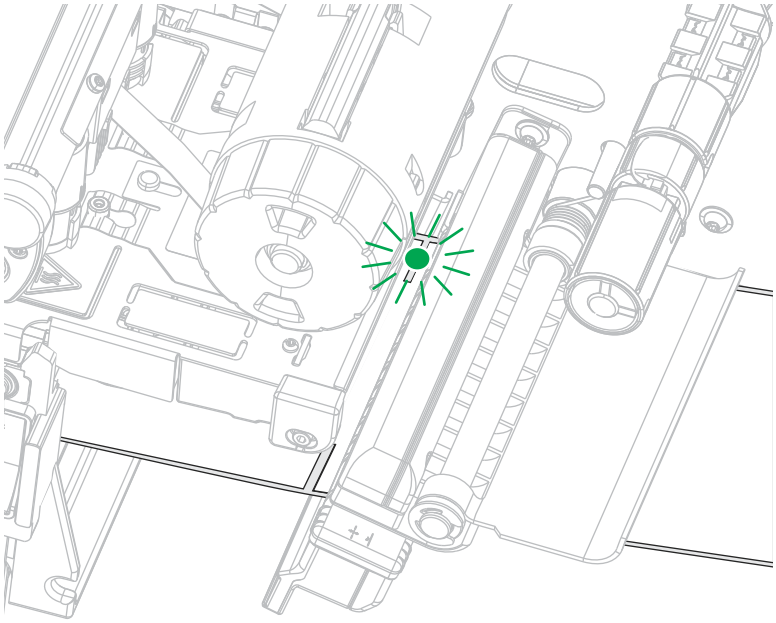

3. If necessary, slide the media sensor horizontally using the media sensor adjustment.

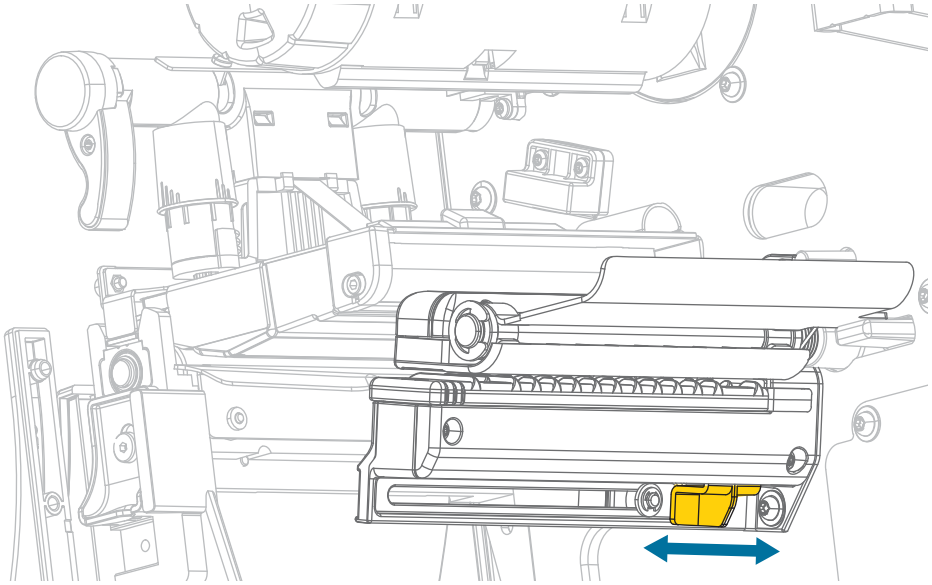

Routine Maintenance

This section provides routine cleaning and maintenance procedures.

Cleaning Schedule and Procedures

Routine preventive maintenance is a crucial part of normal printer operation. By taking good care of your printer, you can minimize potential problems and achieve/maintain the desired print quality standards.

Over time, the movement of media or ribbon across the printhead wears through the protective ceramic coating, exposing and eventually damaging the print elements (dots). To avoid abrasion:

- Clean the printhead frequently.
- Minimize printhead pressure and burn temperature (darkness) settings by optimizing the balance between the two.
- When using Thermal Transfer mode, ensure that the ribbon is either as wide or wider than the media. This is to avoid exposing printhead elements to the more abrasive label material.

IMPORTANT: Zebra is not responsible for damage caused by the use of cleaning fluids on this printer.

Specific cleaning procedures are included in this section. Follow the recommended cleaning schedule listed in the table below.

NOTE: These recommended cleaning intervals are intended as guidelines only. You may have to clean more often depending on your specific application and the media you use for printing.

Table 4 Recommended Cleaning Schedule

Area	Method	Interval
Printhead	Solvent*	Direct Thermal Mode: After every roll of media (or 500 feet of fanfold media). Thermal Transfer Mode: After every roll of ribbon.
Platen roller (standard, white)	Solvent*	
Platen roller (linerless, dark brown)	Dabbing with sticky side of linerless label**	
Media sensors	Air blow	
Ribbon sensor	Air blow	

Table 4 Recommended Cleaning Schedule (Continued)

Area		Method	Interval
Media path		Solvent*	
Ribbon path		Solvent*	
Pinch roller (part of Peel-Off option)		Solvent*	
Cutter module	If cutting continuous, pressure-sensitive media	Solvent*	After every roll of media (or more often, depending upon your application and media).
	If cutting tag stock or label liner material	Solvent* and air blow	After every two or three rolls of media.
Tear-off/peel-off bar		Solvent*	Once a month.
Take-label sensor		Air blow	Once every six months.

NOTE:

* Zebra recommends using the Preventive Maintenance Kit (p/n 47362 or p/n 105950-035 - multipack). In place of the Preventive Maintenance Kit, you may use a lint-free cloth dipped in 99.7% isopropyl alcohol.

For 600 dpi printers, use Save-a-Printhead cleaning film. This specially-coated material removes contamination buildup without damaging the printhead. Call your authorized reseller or distributor for more information.

CAUTION—PRODUCT DAMAGE: ** Do not use solvents, including isopropyl alcohol or the Preventive Maintenance Kit swab, on a linerless platen roller as this could damage the finish.

Clean the Exterior, the Media Compartment, and the Sensors

Over time, dust, grime, and other debris may build up on the outside and inside of your printer, particularly in a harsh operating environment.

Clean the Printer Exterior

You may clean the exterior surfaces of the printer with a lint-free cloth and a small amount of a mild detergent, if necessary. Do not use harsh or abrasive cleaning agents or solvents.

IMPORTANT: Zebra is not responsible for damage caused by the use of cleaning fluids on this printer.

Cleaning the Media Compartment and Sensors

1. Brush, air blow, or vacuum any accumulated paper lint and dust away from the media and ribbon paths.
2. Brush, air blow, or vacuum any accumulated paper lint and dust away from the sensors. (ZT410 shown)

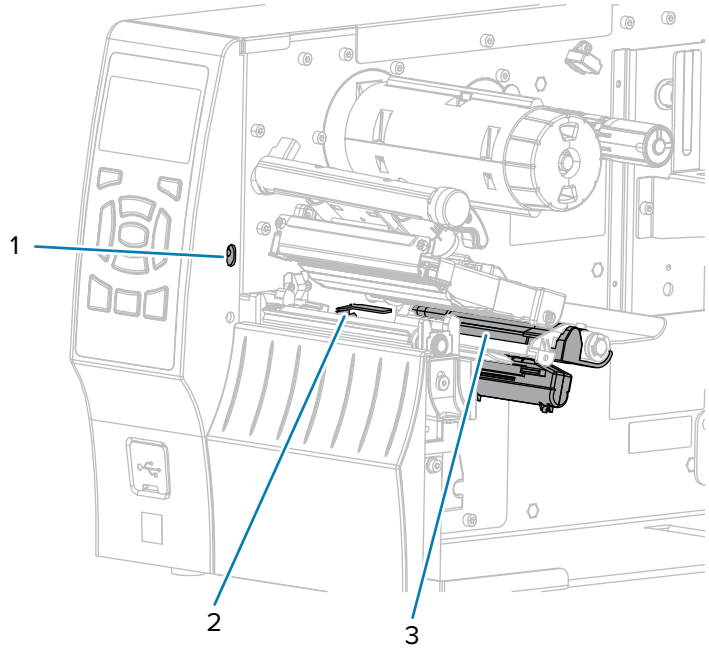

1	Take-label sensor
2	Ribbon sensor
3	Media sensor

Cleaning the Printhead and Platen Roller

Inconsistent print quality, such as voids in the barcode or graphics, may indicate a dirty printhead. For the recommended cleaning schedule, see Cleaning Schedule and Procedures on page 140.

CAUTION—PRODUCT DAMAGE: When cleaning a linerless platen roller, do not wash or scrub, which can damage the platen roller. Remove particles using the adhesive side of linerless media.

IMPORTANT:

While you are not required to turn off printer power when working near an open printhead, Zebra recommends it as a precaution.

If you turn off power, you will lose all temporary settings, such as label formats, and you must reload them before you resume printing.

CAUTION—ESD: Before touching the printhead assembly, discharge any built-up static electricity by touching the metal printer frame or by using an anti-static wrist-strap and mat.

1. Raise the media door.

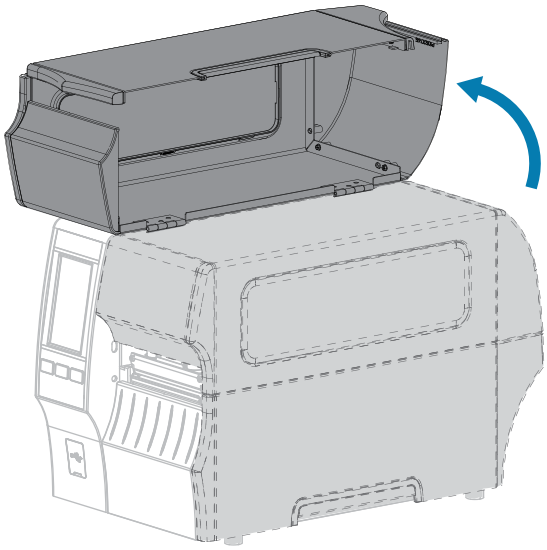

CAUTION: HOT SURFACE: The printhead may be hot and could cause severe burns. Allow the printhead to cool.

2. Open the printhead assembly by rotating the printhead-open lever upward.

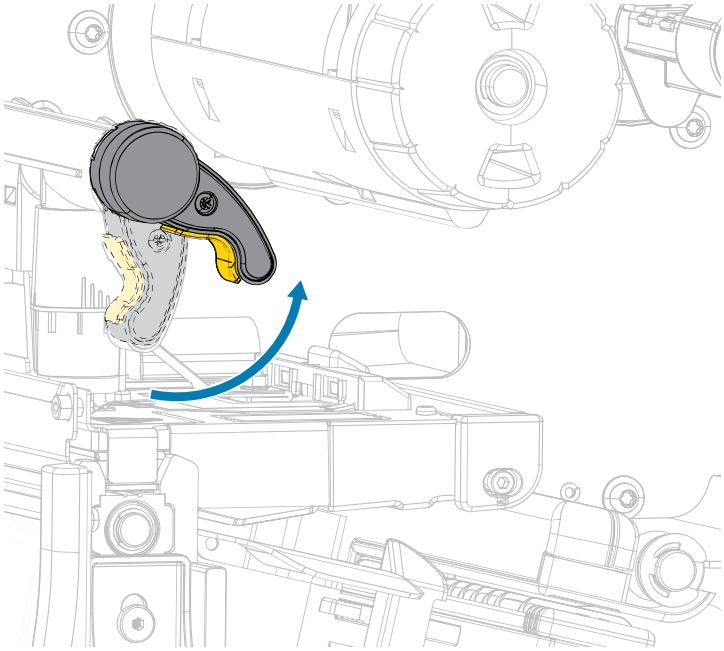

3. Remove the ribbon (if used) and the media.
4. Using the swab from a Zebra Preventive Maintenance Kit, wipe along the brown strip on the printhead assembly from end to end. In place of the Preventive Maintenance Kit, you may use a clean swab dipped in 99.7% isopropyl alcohol. Allow the solvent to evaporate.

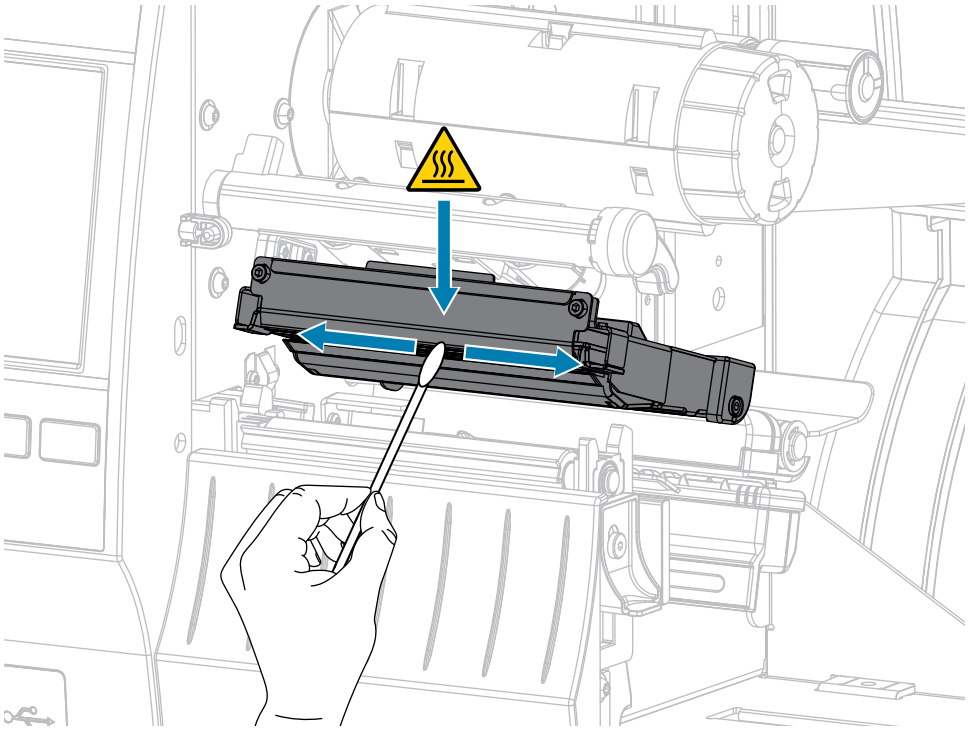

5.

Option	Description
If you have a...	Then...
Linerless platen roller (dark brown)	**CAUTION—PRODUCT DAMAGE:** Do not use the swab on a linerless platen roller because it can cause damage. Lightly touch the linerless platen roller with the sticky side of a linerless label to lift particles off of the exposed area of the platen roller and the media path. Rotate the platen roller to access all sides of it.
Standard platen roller (white)	While manually rotating the standard platen roller, clean it thoroughly with the swab. Allow the solvent to evaporate. 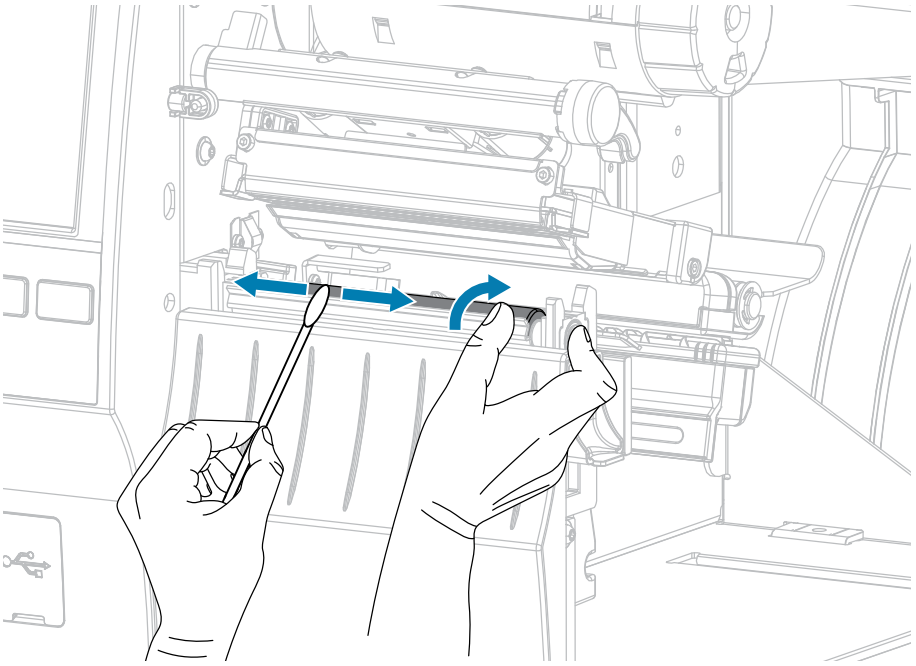

6. Reload the ribbon (if used) and the media. For instructions, see Loading the Ribbon on page 73 or Loading the Media on page 35.

7. Rotate the printhead-open lever downward until it locks the printhead in place.

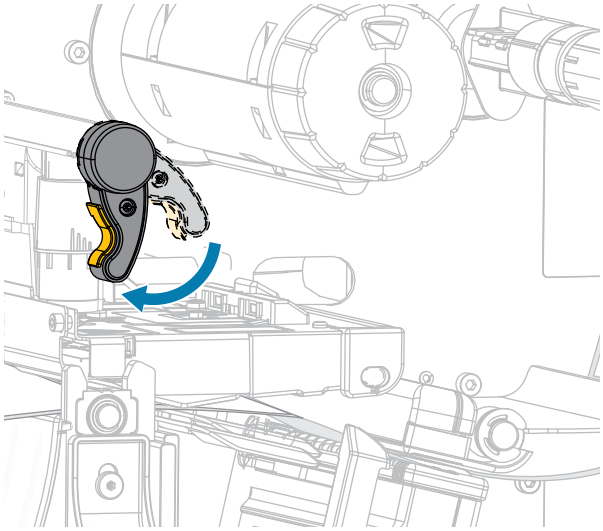

8. Close the media door.

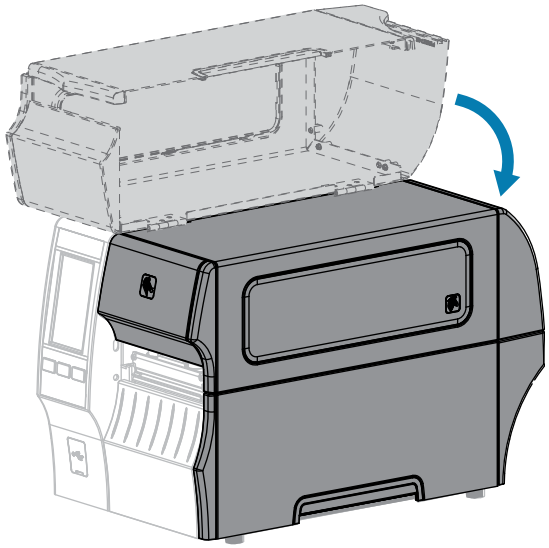

The printer is ready to operate.

9. Press **PAUSE** to exit pause mode and enable printing.

The printer may perform a label calibration or feed a label, depending on your settings.

NOTE:

If performing this procedure does not improve print quality, try cleaning the printhead with Save-A-Printhead cleaning film. This specially coated material removes contamination buildup without damaging the printhead.

Call your authorized Zebra reseller for more information.

Cleaning and Lubricating the Standard Cutter Module

If the cutter is not cutting the labels cleanly or if it jams with labels, clean the cutter blades. After cleaning the blades, apply lubrication to them to help extend the life of your cutter module.

IMPORTANT: This procedure does not apply to the linerless cutter. For the linerless cutter, go to Cleaning and Lubricating the Linerless Cutter.

CAUTION—ELECTRIC SHOCK: Turn off the printer (**O**) and disconnect it from the power source before performing the following procedure.

1. Turn off (**O**) the printer and disconnect the AC power cord.
2. Raise the media door.

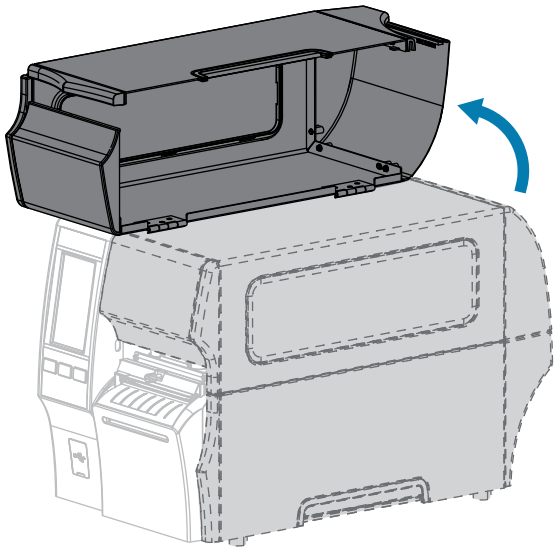

3. Remove media that is loaded through the cutter module.

CAUTION: The cutter blade is sharp. Do not touch or rub the blade with your fingers.

4. Loosen and remove the thumbscrew and lock washer on the cutter shield.

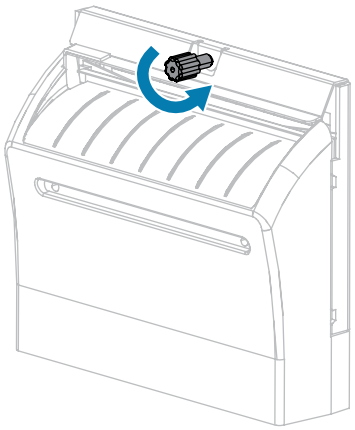

5. Remove the cutter shield.

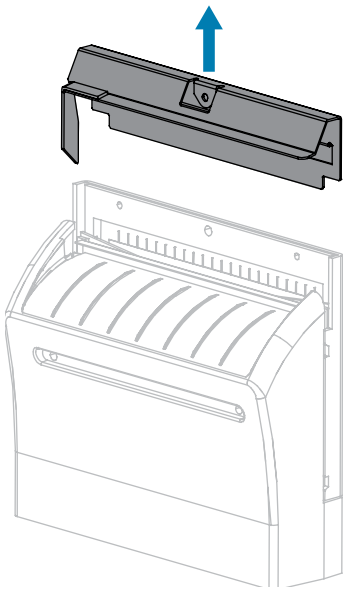

6. If necessary, rotate the cutter motor thumbscrew to fully expose the V-shaped cutter blade (**1**).

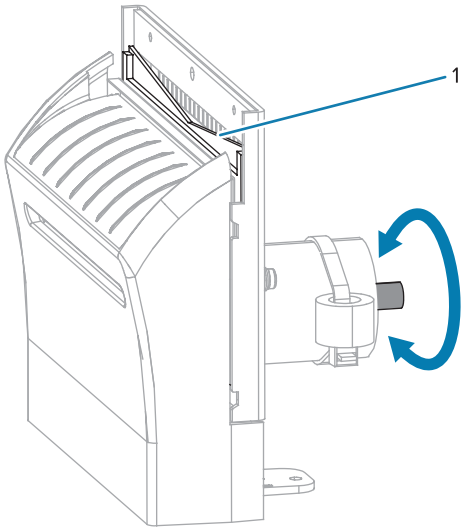

7. Using the swab from the Preventive Maintenance Kit (part number 47362), wipe along the upper cutting surface and the cutter blade. In place of the Preventive Maintenance Kit , you may use a clean swab dipped in 99.7% isopropyl alcohol. Allow the solvent to evaporate.

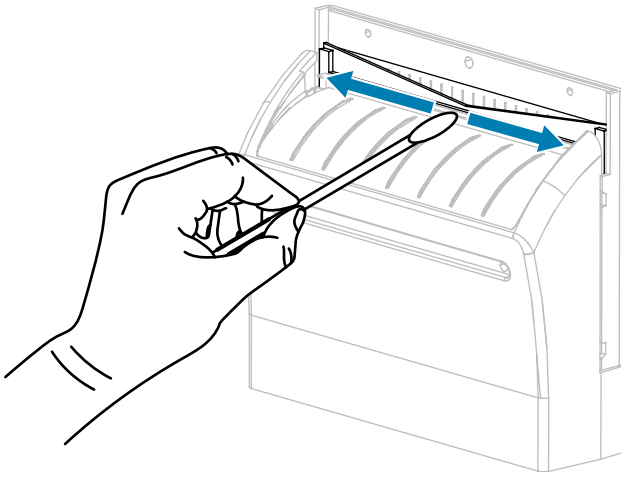

8. When the solvent has evaporated, soak a clean swab in a general-purpose, higher-viscosity silicone or PTFE oil lubricant.

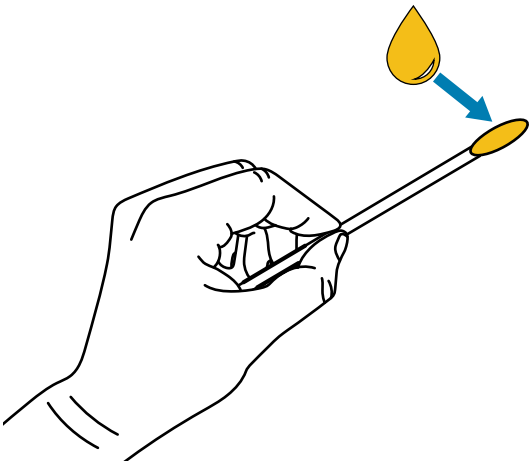

9. Apply an even layer along all exposed surfaces of both cutter blades. Remove any excess oil so that none of it comes in contact with the printhead or platen roller.

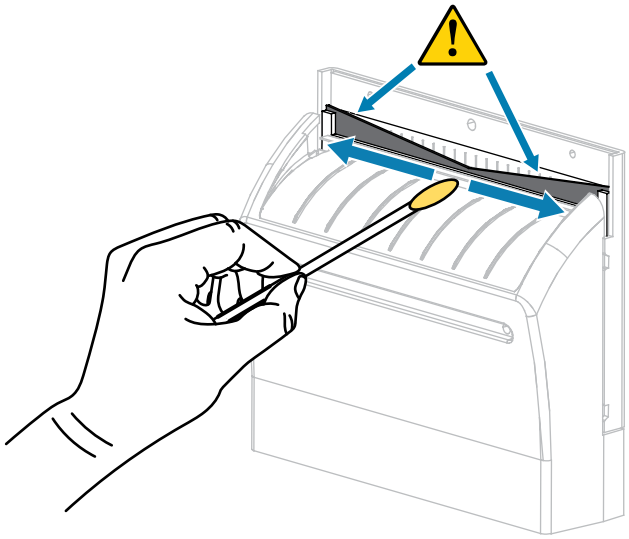

CAUTION: The cutter blade is sharp. For operator safety, replace the cutter shield.

10. Replace the cutter shield.

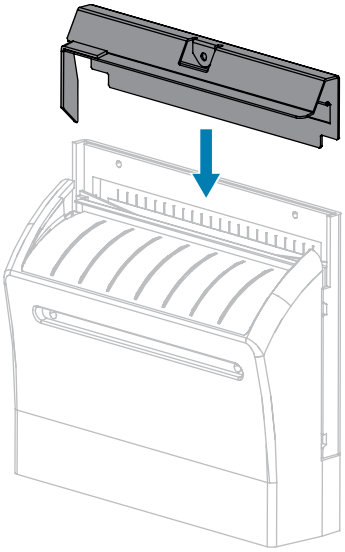

11. Secure it with the thumbscrew and lock washer that you removed earlier.

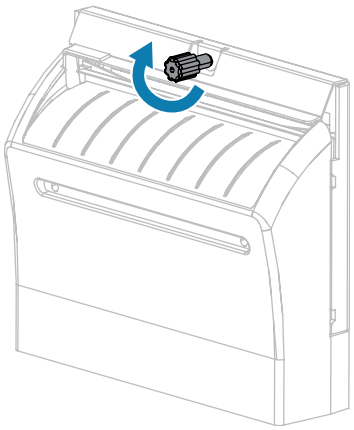

12. Reload the media.

13. Close the media door.

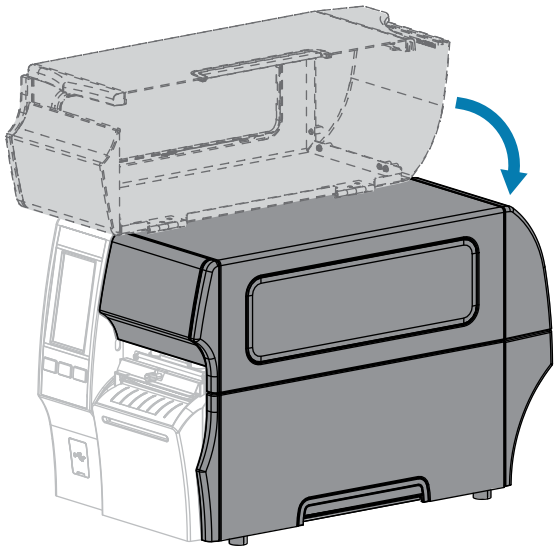

14. Plug the printer into its power source, and then turn on (**I**) the printer.

The cutter blade returns to its operating position.

15. If the cutter continues to perform unsatisfactorily, contact an authorized service technician for assistance.

Cleaning and Lubricating the Linerless Cutter

If the linerless cutter is not cutting the labels cleanly or if it jams with labels, clean the cutter blade. After cleaning the blade, apply lubrication to the blade to help extend the life of your cutter module.

CAUTION—PRODUCT DAMAGE: Do not use oil or solvents (including isopropyl alcohol or the Preventive Maintenance Kit swab) on a linerless platen roller, as this could damage the finish.

1. Turn off (**O**) the printer and disconnect the AC power cord.
2. Raise the media door.

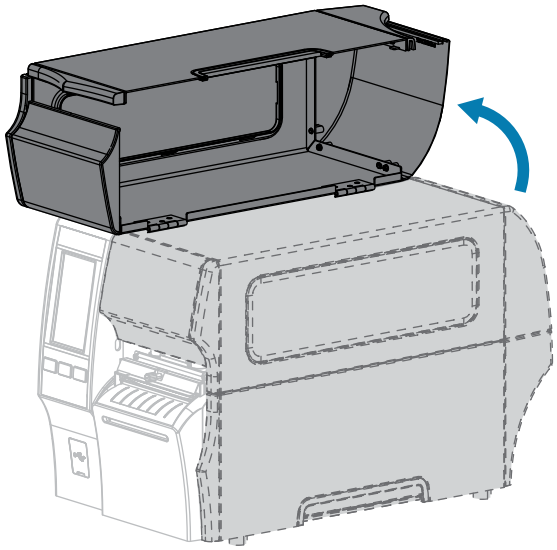

3. Remove media that is loaded through the cutter module.
4. During this procedure, rotate the cutter motor thumbscrew as needed to expose the surfaces of the cutter blade.

CAUTION: The cutter blade is sharp. Do not touch or rub the blade with your fingers.

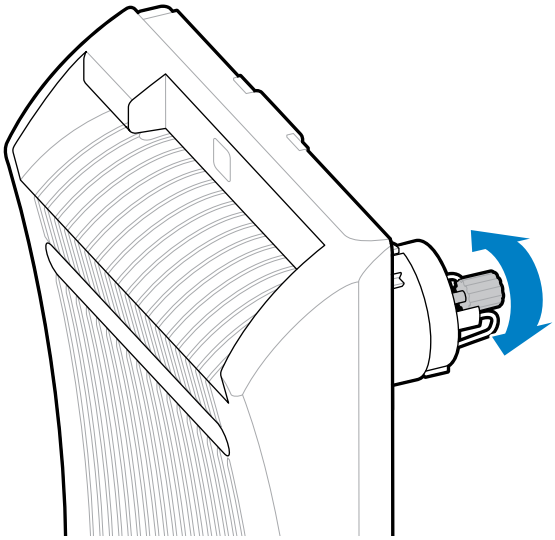

5. Using the swab from a Preventive Maintenance Kit (part number 47362), wipe along the upper cutting surface and the cutter blade. In place of the Preventive Maintenance Kit , you may use a clean swab dipped in 99.7% isopropyl alcohol. Allow the solvent to evaporate. If particles or adhesive are visible and cannot be removed with the swab, gently try to remove them with a plastic spudger (no metal).

CAUTION—PRODUCT DAMAGE: Do not touch the swab to the linerless platen roller because doing so could damage the platen roller finish.

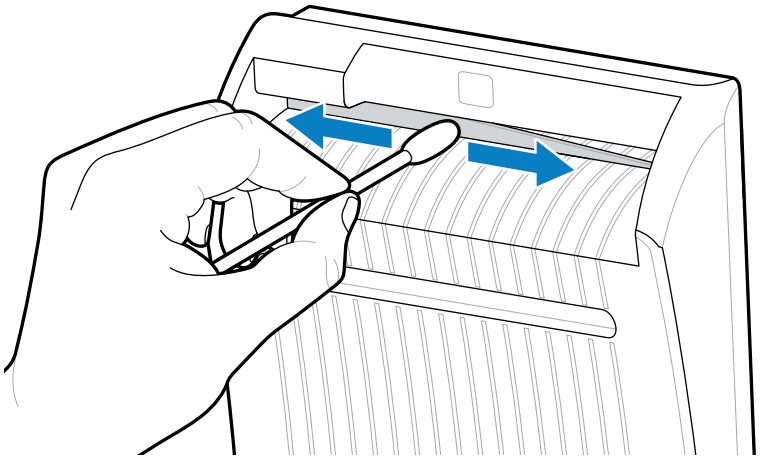

6. Press down on the cutter release lever, and then pivot the cutter forward.

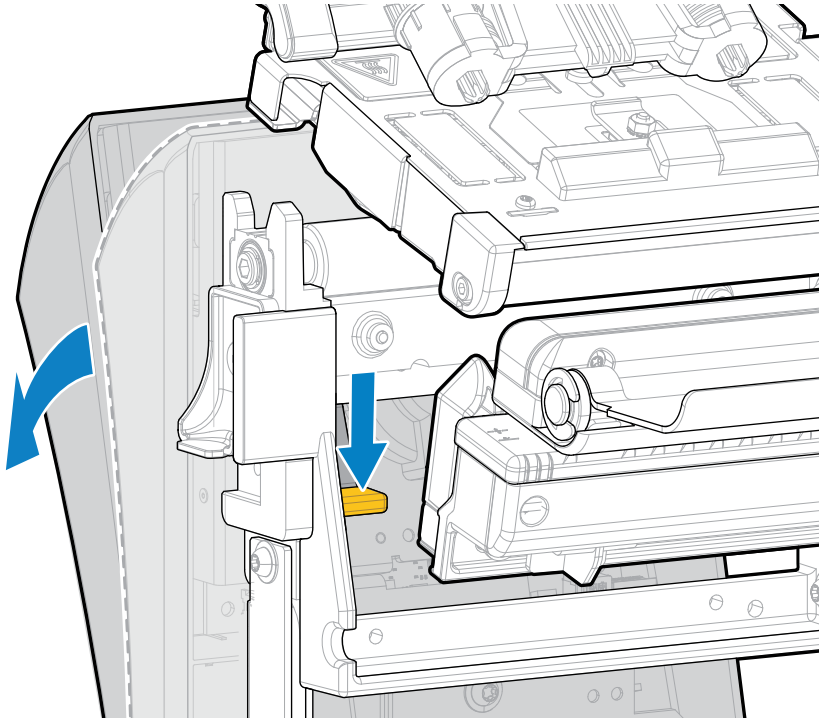

7. Using the swab, wipe along the upper cutting surface and the cutter blade from the back of the cutter. Allow the solvent to evaporate. If particles are visible and cannot be removed with the swab, gently try to remove them with a plastic spudger (no metal).

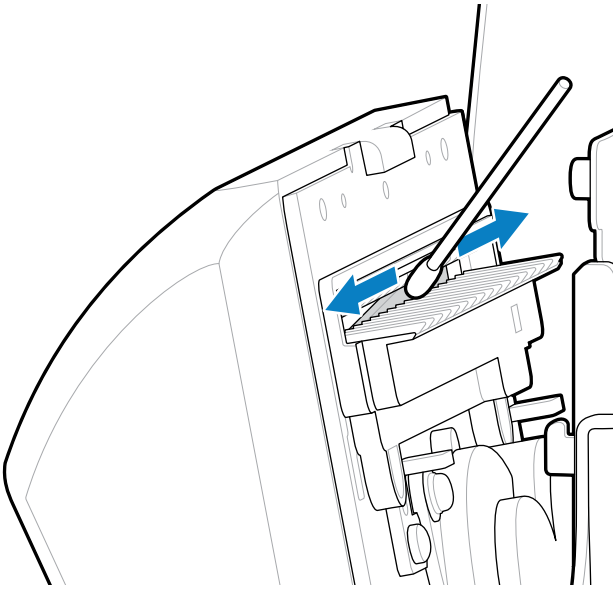

8. When the solvent has evaporated, soak a clean swab in a general-purpose, higher-viscosity silicone or PTFE oil lubricant.

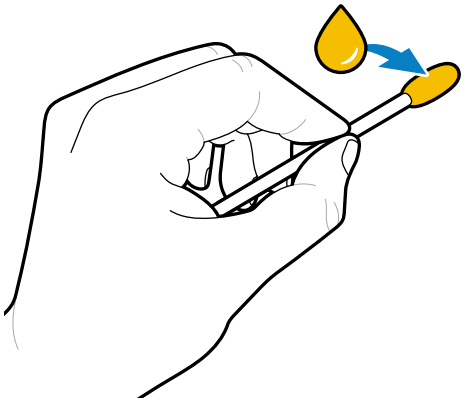

CAUTION—PRODUCT DAMAGE: Do not touch the swab to the linerless platen roller because doing so could damage the platen roller finish.

9. Apply an even layer along all exposed surfaces of the cutter blade, front and back. Remove any excess oil so that none of it comes in contact with the printhead or platen roller.

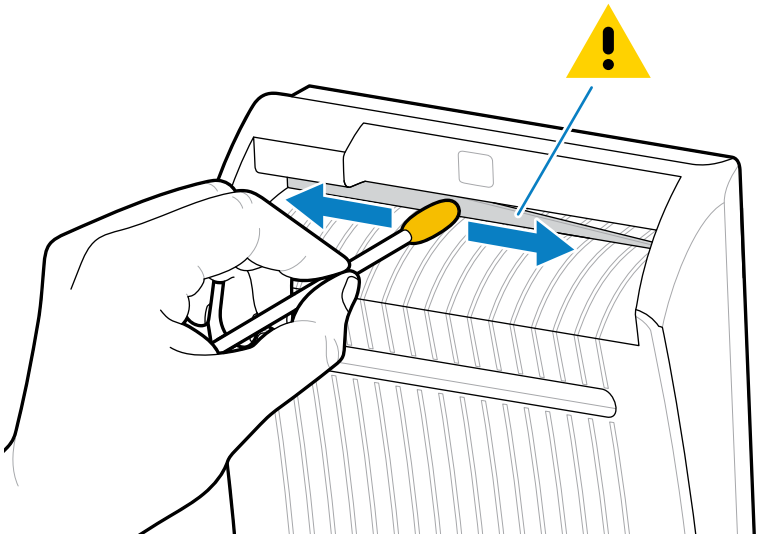

10. Reload the media.
11. Close the media door.

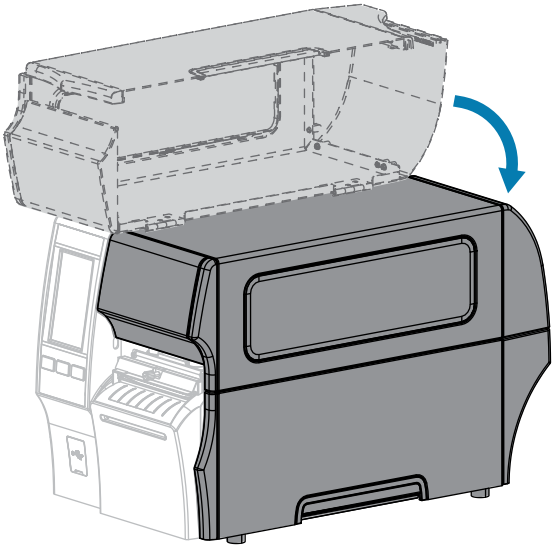

12. Plug the printer into its power source, and then turn on (**I**) the printer.

    The cutter blade returns to its operating position.

13. If the cutter continues to perform unsatisfactorily, contact an authorized service technician for assistance.

Removing Used Ribbon

At minimum, remove used ribbon from the ribbon take-up spindle each time you change the roll of ribbon.

With ribbon that is half or less the width of the printhead, remove used ribbon each time you load a new roll of media. This ensures that uneven pressure on the ribbon take-up spindle does not interfere with the ribbon release bars on the spindle.

1. Has the ribbon run out?

If the ribbon...	Then
Ran out	Continue with the next step in this procedure.
Did not run out	Cut or break the ribbon before the ribbon take-up spindle. 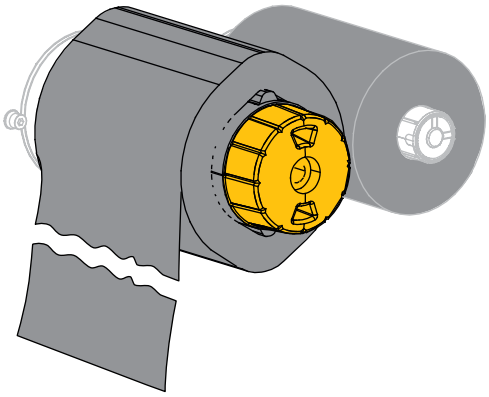 **CAUTION—PRODUCT DAMAGE:** Do not cut the ribbon directly on the ribbon take-up spindle. Doing so may damage the spindle.

2. While holding the ribbon take-up spindle, turn the ribbon release knob to the left until it stops.

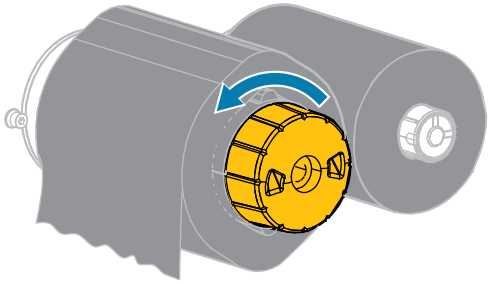

The ribbon release bars pivot down, easing the spindle's grip on the used ribbon.

3. After the ribbon release bars have pivoted down, if possible, turn the ribbon take-up spindle one full turn to the right to help loosen the ribbon on the spindle.

4. Slide the used ribbon off the ribbon take-up spindle and discard.

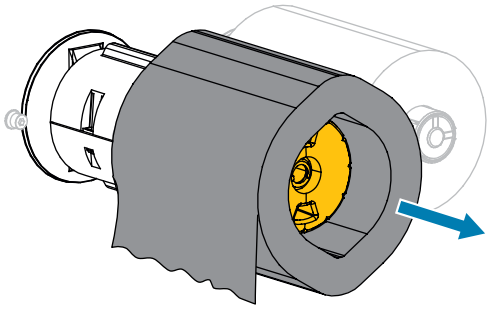

Replacing Printer Components

Some printer components, such as the printhead and platen roller, may wear out over time and can be replaced easily. Regular cleaning may extend the life of some of these components.

See Cleaning Schedule and Procedures on page 140 for the recommended cleaning intervals.

Ordering Replacement Parts

Zebra printers are designed to work only with genuine Zebra printheads, thus maximizing safety and print quality. Contact your authorized Zebra reseller for part ordering information.

Recycling Printer Components



The majority of this printer's components are recyclable. The printer's main logic board may include a battery that you should dispose of properly.

Do not dispose of any printer components in unsorted municipal waste. Please dispose of the battery according to your local regulations, and recycle the other printer components according to your local standards. For more information, see zebra.com/environment.

Storing the Printer

If you are not placing the printer into immediate operation, repackage it using the original packing materials. You may store the printer under the following conditions:

- Temperature: –40°F to 140°F (–40°C to 60°C)
- Relative humidity: 5% to 85% non-condensing

Lubrication

The only lubrication needed for this printer is for the cutter modules. Follow the instructions in Cleaning and Lubricating the Standard Cutter Module on page 147 or Cleaning and Lubricating the Linerless Cutter on page 152.

NOTE: Do not lubricate any other parts of the printer.

CAUTION—PRODUCT DAMAGE: Some commercially available lubricants will damage the finish and the mechanical parts if used on this printer. This includes the linerless platen roller.

Diagnostics and Troubleshooting

This section provides diagnostic tests and other information that may help you to optimize printing or to troubleshoot issues with your printer.

Go to zebra.com/zt400 for access to videos and additional online information designed to assist you.

Evaluating Barcode Quality

The figure below shows how printer settings such as darkness and print speed can affect the quality of the printed barcodes.

Set the print darkness to the lowest setting that delivers good print quality. The Print Quality Assistant in Running the Print Wizard and Printing a Test Label on page 77 can help you determine the most optimal settings.

Figure 4 Barcode Darkness Comparison

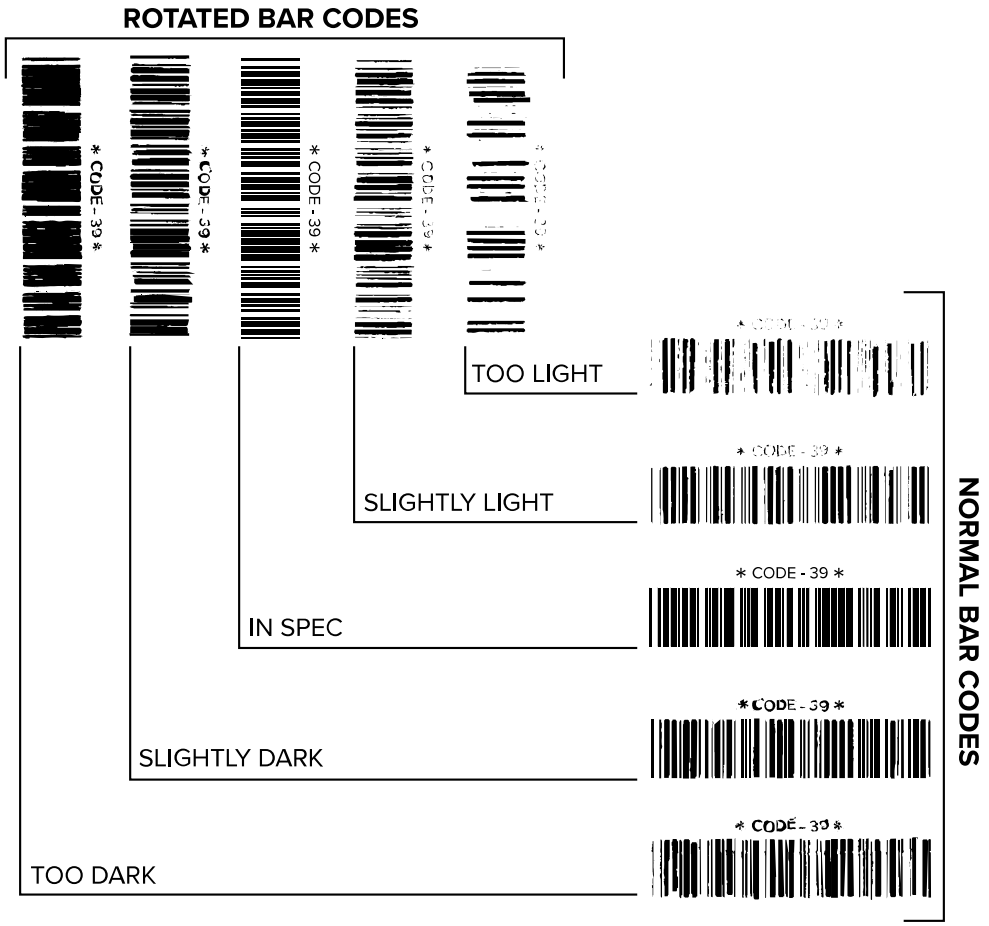

Appearance	Description
Too dark labels	Fairly obvious. These may be readable but are not “in-spec.” • The normal barcode bars increase in size. • The openings in small alphanumeric characters may fill in with ink. • Rotated barcode bars and spaces run together.
Slightly dark labels	Not as obvious as the too-dark labels. • The normal barcode will be “in-spec.” • Small alphanumeric characters will be bold, and may appear slightly filled in.

Appearance	Description
	• The rotated barcode spaces are small when compared to the “in-spec” code, possibly making the code unreadable.
“In-spec” labels	Whether or not a label is “in-spec” can only be confirmed by a verifier, but they typically exhibit some visible characteristics. • The normal barcode will have complete, even bars along with clear, distinct spaces. • The rotated barcode will have complete, even bars along with clear, distinct spaces. Although it may not look as good as a slightly dark barcode, the barcode will be “in-spec.” • In both normal and rotated styles, small alphanumeric characters will look complete.
Slightly light labels	In some cases, these are preferred to slightly dark ones for “in-spec” barcodes. • Both normal and rotated barcodes will be “in-spec,” but small alphanumeric characters may not be complete.
Too light labels	These are obvious. • Both normal and rotated barcodes have incomplete bars and spaces. • Small alphanumeric characters are unreadable.

Configuration Labels

Two of the most commonly used printer diagnostic items are the printer and network configuration labels. Analyzing the information on these labels can help you to troubleshoot potential issues.

To print a printer configuration label, touch **Menu** > **Settings** > **Print System Settings**.

Figure 5 Sample Printer Configuration Label

```
PRINTER CONFIGURATION

Zebra Technologies
ZTC ZT620R-203dpi ZPL
76J162700886

+30.0.............. DARKNESS
6.0 IPS............ PRINT SPEED
-007............... TEAR OFF
TEAR OFF........... PRINT MODE
CONTINUOUS......... MEDIA TYPE
TRANSMISSIVE....... SENSOR SELECT
DIRECT-THERMAL..... PRINT METHOD
1344............... PRINT WIDTH
2000............... LABEL LENGTH
P1085892/00005 2... PRINT HEAD ID
15.0IN   380MM..... MAXIMUM LENGTH
MAINT. OFF......... EARLY WARNING
CONNECTED.......... USB COMM.
BIDIRECTIONAL...... PARALLEL COMM.
RS232.............. SERIAL COMM.
9600............... BAUD
8 BITS............. DATA BITS
NONE............... PARITY
XON/XOFF........... HOST HANDSHAKE
NONE............... PROTOCOL
NORMAL MODE........ COMMUNICATIONS
<~>  7EH........... CONTROL PREFIX
<^>  5EH........... FORMAT PREFIX
<,>  2CH........... DELIMITER CHAR
ZPL II............. ZPL MODE
INACTIVE........... COMMAND OVERRIDE
FEED............... MEDIA POWER UP
LENGTH............. HEAD CLOSE
DEFAULT............ BACKFEED
+000............... LABEL TOP
+0000.............. LEFT POSITION
OFF................ APPLICATOR PORT
ENABLED............ ERROR ON PAUSE
PULSE MODE......... START PRINT SIG
DISABLED........... REPRINT MODE
080................ WEB SENSOR
090................ MEDIA SENSOR
255................ TAKE LABEL
027................ MARK SENSOR
027................ MARK MED SENSOR
000................ TRANS GAIN
005................ TRANS BASE
060................ TRANS LED
002................ MARK GAIN
100................ MARK LED
DPCSWFXM........... MODES ENABLED
.................. MODES DISABLED
1344 8/MM FULL..... RESOLUTION
4.0................ LINK-OS VERSION
V80.20.03 <-....... FIRMWARE
1.3................ XML SCHEMA
6.6.0 22.89........ HARDWARE ID
32768k..........R: RAM
524288k.........E: ONBOARD FLASH
NONE............... FORMAT CONVERT
MM/DD/YYYY 24HR.... IDLE DISPLAY
05/11/17........... RTC DATE
06:40.............. RTC TIME
ENABLED............ ZBI
2.1................ ZBI VERSION
READY.............. ZBI STATUS
TM:M6E MICRO....... RFID READER
20.00.00.01........ RFID HW VERSION
01.03.00.18........ RFID FW VERSION
USA/CANADA......... RFID REGION CODE
USA/CANADA......... RFID COUNTRY CODE
RFID OK............ RFID ERR STATUS
16................. RFID READ PWR
16................. RFID WRITE PWR
FO................. PROG. POSITION
0.................. RFID VALID CTR
0.................. RFID VOID CTR
NONE............... ADAPTIVE ANTENNA
A4................. RFID ANTENNA
570 LABELS......... NONRESET CNTR
570 LABELS......... RESET CNTR1
570 LABELS......... RESET CNTR2
2,798 IN........... NONRESET CNTR
2,798 IN........... RESET CNTR1
2,798 IN........... RESET CNTR2
7,107 CM........... NONRESET CNTR
7,107 CM........... RESET CNTR1
7,107 CM........... RESET CNTR2
001 WIRELESS....... SLOT 1
*** EMPTY.......... SLOT 2
0.................. MASS STORAGE COUNT
0.................. HID COUNT
OFF................ USB HOST LOCK OUT
FIRMWARE IN THIS PRINTER IS COPYRIGHTED
```

To print a network configuration label, touch **Menu** > **Networks** > **Print: Network Info**.

Figure 6 Sample Network Configuration Label

```
Network Configuration

Zebra Technologies
ZTC ZTXXX-XXXdpi ZPL
XXXXXXXXXXXX

Wired.............. PRIMARY NETWORK
PrintServer........ LOAD LAN FROM?
INTERNAL WIRED..... ACTIVE PRINTSRVR

Wired*
ALL................ IP PROTOCOL
192.168.000.017.... IP ADDRESS
255.255.255.000.... SUBNET
192.168.000.254.... GATEWAY
000.000.000.000.... WINS SERVER IP
YES................ TIMEOUT CHECKING
300................ TIMEOUT VALUE
000................ ARP INTERVAL
9100............... BASE RAW PORT
9200............... JSON CONFIG PORT

Wireless
ALL................ IP PROTOCOL
000.000.000.000.... IP ADDRESS
255.255.255.000.... SUBNET
000.000.000.000.... GATEWAY
000.000.000.000.... WINS SERVER IP
YES................ TIMEOUT CHECKING
300................ TIMEOUT VALUE
000................ ARP INTERVAL
9100............... BASE RAW PORT
9200............... JSON CONFIG PORT
INSERTED........... CARD INSERTED
02dfH.............. CARD MFG ID
9134H.............. CARD PRODUCT ID
ac:3f:a4:82:05:9c.. MAC ADDRESS
YES................ DRIVER INSTALLED
INFRASTRUCTURE..... OPERATING MODE
125................ ESSID
1.0................ CURRENT TX RATE
OPEN............... WEP TYPE
WPA PSK............ WLAN SECURITY
1.................. WEP INDEX
000................ POOR SIGNAL
LONG............... PREAMBLE
NO................. ASSOCIATED
ON................. PULSE ENABLED
15................. PULSE RATE
OFF................ INTL MODE
USA/CANADA......... REGION CODE
USA/CANADA......... COUNTRY CODE
0x7FF.............. CHANNEL MASK

Bluetooth
4.3.1p1............ FIRMWARE
02/13/2015......... DATE
on................. DISCOVERABLE
3.0/4.0............ RADIO VERSION
on................. ENABLED
AC:3F:A4:82:05:9D.. MAC ADDRESS
76J162700886....... FRIENDLY NAME
no................. CONNECTED
1.................. MIN SECURITY MODE
nc................. CONN SECURITY MODE
supported.......... iOS

FIRMWARE IN THIS PRINTER IS COPYRIGHTED
```

PAUSE Self-Test

This self test can be used to provide the test labels required when making adjustments to the printer's mechanical assemblies or to determine if any printhead elements are not working.

The following shows a sample printout.

Figure 7 PAUSE Test Label

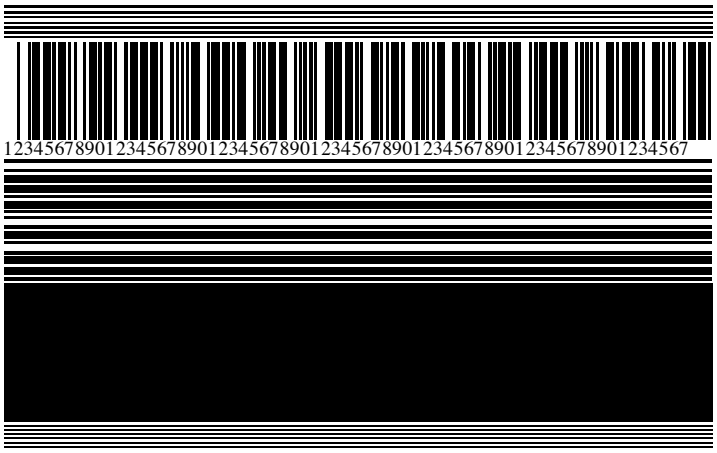

1. Turn off (**O**) the printer.
2. Press and hold **PAUSE** while turning on (**I**) the printer. Hold **PAUSE** until the first control panel light turns off.

   The initial self test prints 15 labels at the printer's slowest speed, and then automatically pauses the printer. Each time **PAUSE** is pressed, an additional 15 labels print.

   While the printer is paused:

   - Pressing **CANCEL** alters the self test. Each time **PAUSE** is pressed, 15 labels print at 152 mm (6 in.) per second.
   - Pressing **CANCEL** again alters the self test a second time. Each time **PAUSE** is pressed, 50 labels print at the printer's slowest speed.
   - Pressing **CANCEL** again alters the self test a third time. Each time **PAUSE** is pressed, 50 labels print at 152 mm (6 in.) per second.
   - Pressing **CANCEL** again alters the self test a fourth time. Each time **PAUSE** is pressed, 15 labels print at the printer's maximum speed.
3. To exit this self test at any time, press and hold **CANCEL**.

Sensor Profile

Tap **Menu** > **Print** > **Sensors** > **Print: Sensor Profile** to print a sensor profile image. The image will extend across several actual labels or tags.

Use the sensor profile image to troubleshoot the following situations:

- The printer experiences difficulty in determining gaps (web) between labels.
- The printer incorrectly identifies preprinted areas on a label as gaps (web).
- The printer cannot detect ribbon.

Compare your results to the examples shown in this section. If the sensitivity of the sensors must be adjusted, calibrate the printer. (See Calibrating the Ribbon and Media Sensors on page 131.)

Ribbon Sensor Profile

The line labeled RIBBON (1) on the sensor profile indicates the ribbon sensor readings. The ribbon sensor threshold setting is indicated by OUT (2). If the ribbon readings are below the threshold value, the printer does not acknowledge that ribbon is loaded.

Figure 8 Sensor Profile (Ribbon Section)

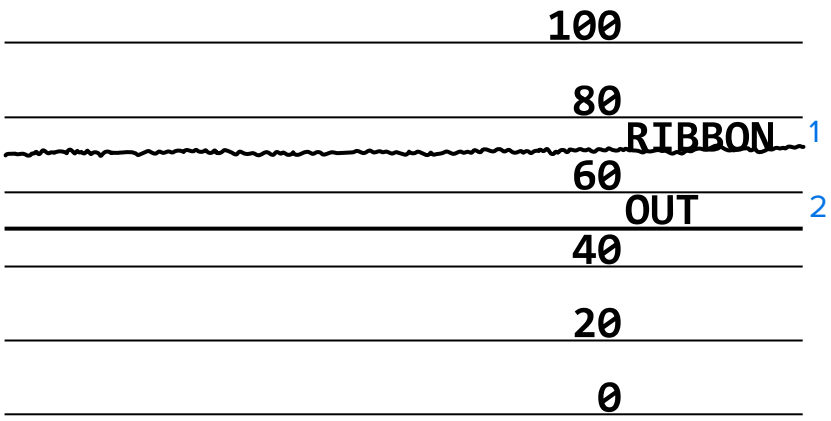

Media Sensor Profile

The line labeled MEDIA (1) on the sensor profile indicates the media sensor readings. The media sensor threshold settings are indicated by WEB (2). The media out threshold is indicated by OUT (3). The upward or downward spikes (4) indicate divisions between labels (the web, notch, or black mark), and the lines between the spikes (5) indicate where labels are located.

If you compare the sensor profile printout to a length of your media, the spikes should be the same distance apart as the gaps on the media. If the distances are not the same, the printer may be having difficulty determining where the gaps are located.

Figure 9 Media Sensor Profile (Gap/Notch Media)

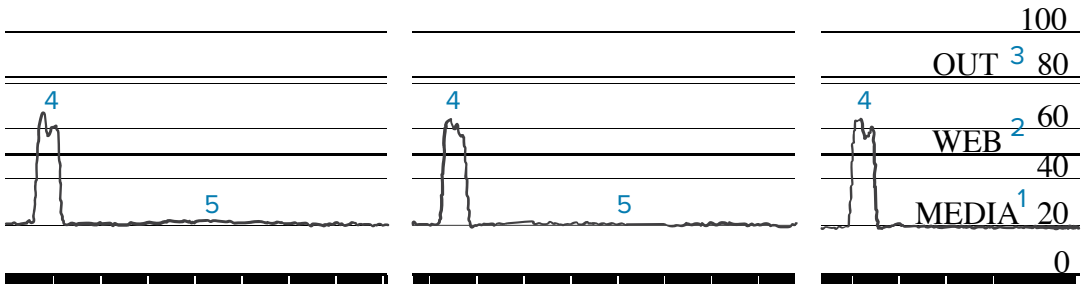

Figure 10 Media Sensor Profile (Black Mark Media)

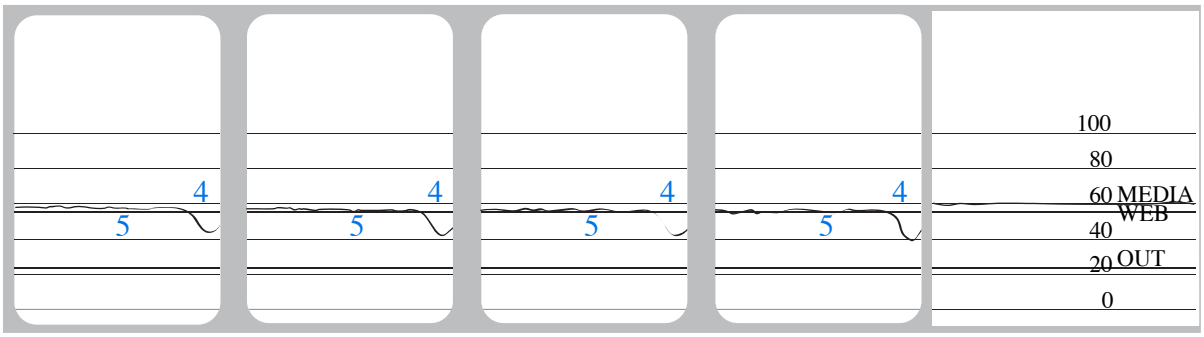

Using Communication Diagnostics Mode

The communication diagnostics test is a troubleshooting tool for checking the interconnection between the printer and the host computer. When the printer is in diagnostics mode, it prints all data received from the host computer as straight ASCII characters with the hex values below the ASCII text. The printer prints all characters received, including control codes such as CR (carriage return). Figure 11 Sample Communications Diagnostics Mode Label on page 165 shows a typical test label from this test.

NOTE: The test label prints upside-down.

Figure 11 Sample Communications Diagnostics Mode Label

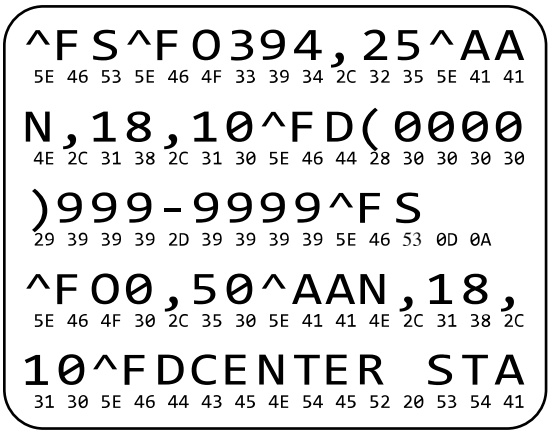

1. Set the label width equal to or less than the actual media width being used for the test. Tap **Menu** > **Print** > **Print Quality** > **Label Width** to access the label width setting.
2. Tap **Menu** > **System** > **Program Language**, and set the **Diagnostic Mode** option to **ENABLED**.

   The printer enters diagnostics mode and prints any data received from the host computer on a test label.
3. Check the test label for error codes. For any errors, check that your communication parameters are correct.

   Errors show on the test label as follows:

   - `FE` indicates a framing error.
   - `OE` indicates an overrun error.
   - `PE` indicates a parity error.
   - `NE` indicates noise.
4. To exit this self test and return to normal operation, power cycle the printer or set the Diagnostic Mode option to **DISABLED**.

Loading Defaults or Last Saved Values

Restoring the printer to default values or to the last saved values can help if things are not working as expected.

Touch **Menu** > **System** > **Settings** > **Restore Defaults** to see the available options.

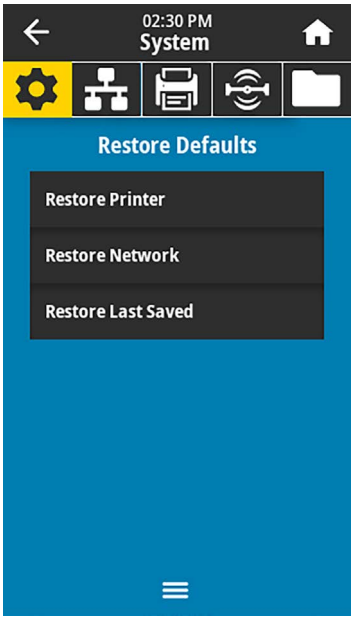

RESTORE PRINTER	Restores all printer settings other than the network settings back to the factory defaults. Use care when loading defaults because you will need to reload all settings that you changed manually.
RESTORE NETWORK	Reinitializes the printer's wired or wireless print server. With a wireless print server, the printer also reassociates with your wireless network.
RESTORE LAST SAVED	Loads settings from the last permanent save.

See System > Settings > Restore Defaults for additional ways to restore these values.

Alert and Error States

If the background color of the Home screen changes, you may need to take an action to restore the printer to a Ready status.

- Red and yellow backgrounds typically halt printing until the issue is resolved.
- Informational messages with a green background usually disappear without user intervention, and printing continues as normal.
- Touch **Reprint** to print the last label printed. If the button is not visible, no label format is available to reprint

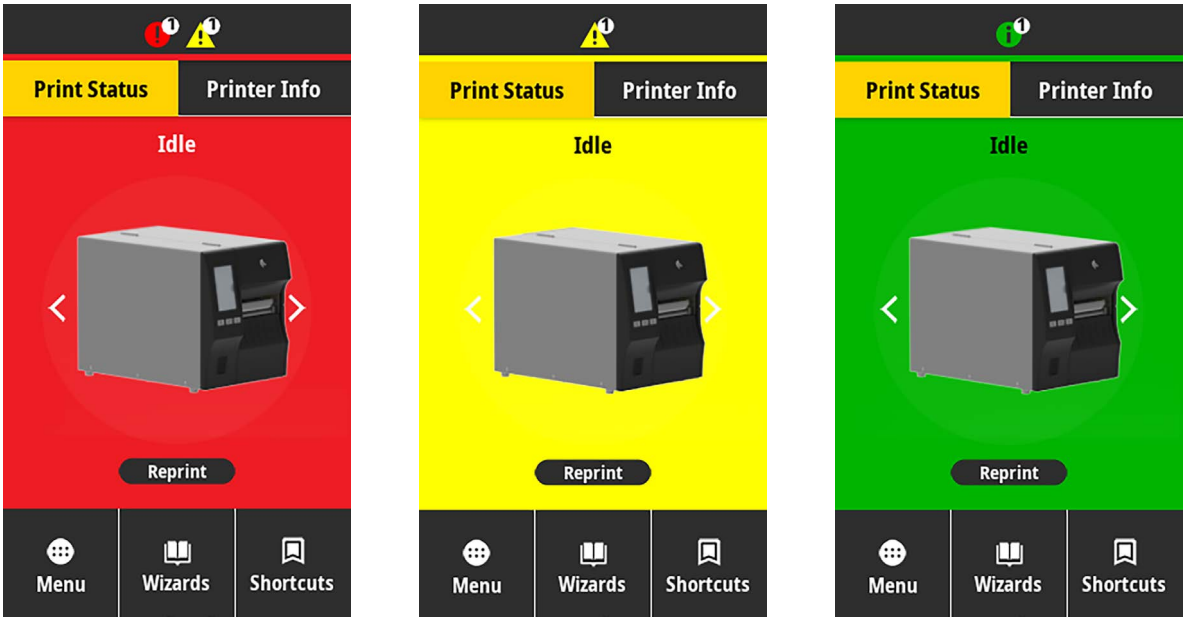

Touch the icons in the bar at the top of the Home screen to view the error, alert, or informational message. See Alerts and Error Messages on page 168 for recommended actions.

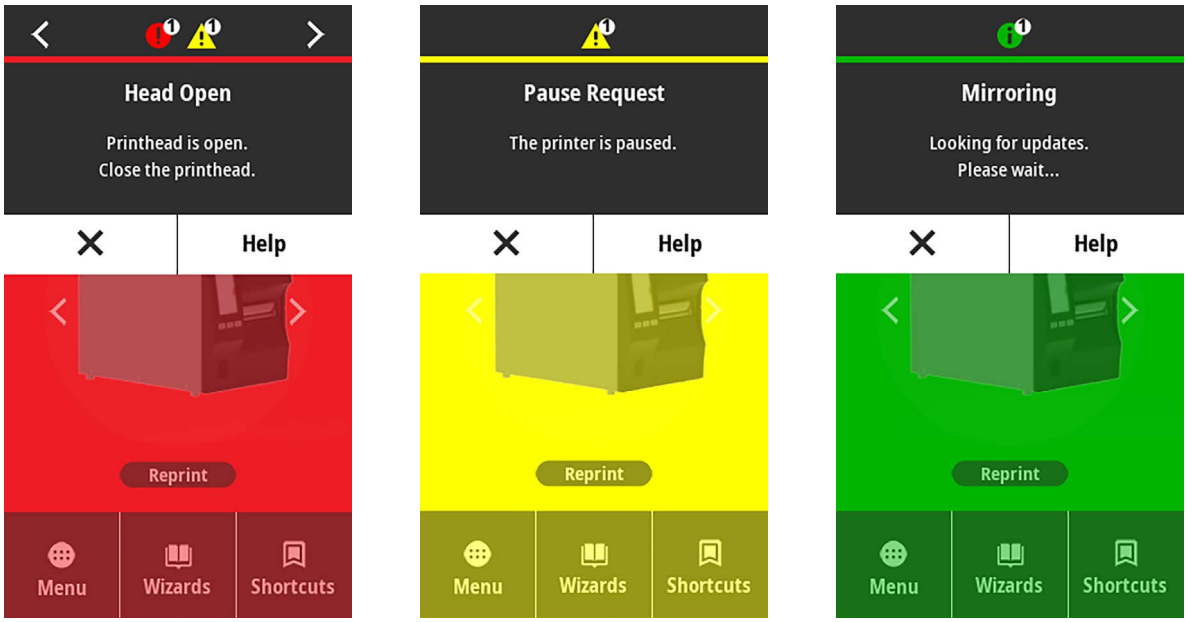

Alerts and Error Messages

Display	Possible Causes	Recommended Solutions
	The printhead is not fully closed.	Close the printhead completely.
	The printhead open sensor is not working properly.	Call a service technician to replace the sensor.
	The media is not loaded or is loaded incorrectly.	Load media correctly. See Loading the Media on page 35.
	Misaligned media sensor.	Check the position of the media sensor.
	The printer is set for non-continuous media, but continuous media is loaded.	**1.** Install the proper media type, or reset printer for the current media type. **2.** Calibrate the printer. See Calibrating the Ribbon and Media Sensors on page 131.

Display	Possible Causes	Recommended Solutions
	There is an issue with the media in the media path.	**1.** Check for media that is loaded incorrectly or stuck to components in the media path. **2.** Check if media is wrapped around the platen roller. Carefully remove any labels. If necessary, clean the platen roller to remove adhesive (see Cleaning the Printhead and Platen Roller on page 143).
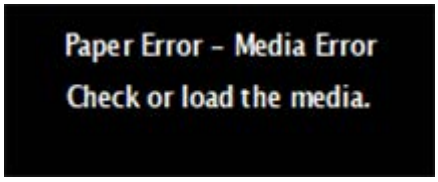	The linerless cutter experienced a media jam, or the linerless media wrapped around the platen roller.	Refer to the PAPER ERROR recommendations in Linerless Printing or Cutter Issues.
	In thermal transfer mode: • ribbon is not loaded • ribbon is loaded incorrectly • the ribbon sensor is not detecting ribbon • media is blocking the ribbon sensor	**1.** Load the ribbon correctly. See Loading the Ribbon on page 73. **2.** Calibrate the printer. See Calibrating the Ribbon and Media Sensors on page 131.
	In thermal transfer mode, the printer did not detect the ribbon even though it is loaded correctly.	Calibrate the printer. See Calibrating the Ribbon and Media Sensors on page 131 or load printer defaults by touching **Menu** > **System** > **Settings** > **Restore Defaults** > **Restore Printer**.
	If you are using direct thermal media, the printer is waiting for ribbon to be loaded because it is incorrectly set for thermal transfer mode.	Set the printer for Direct Thermal mode. See Print > Print Quality > Print Type.

Display	Possible Causes	Recommended Solutions
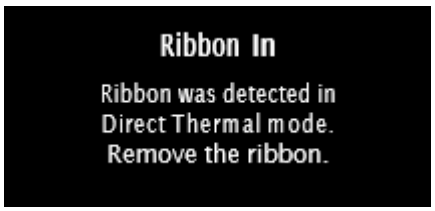	Ribbon is loaded, but the printer is set for direct thermal mode.	Ribbon is not required with direct thermal media. If you are using direct thermal media, remove the ribbon. This error message will not affect printing.
		If the message persists with no ribbon in the printer, Calibrate the printer. See Calibrating the Ribbon and Media Sensors on page 131.
		If you are using thermal transfer media, which requires ribbon, set the printer for Thermal Transfer mode. See Determining the Media Handling Method on page 33.
	The printhead was replaced with one that is not a genuine Zebra printhead.	Install a genuine Zebra printhead.
	There is an issue with the printhead.	Turn the printer off and then back on to see if the error repeats. If it does, replace the printhead.
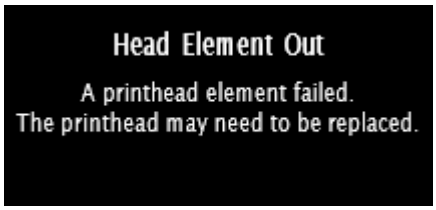	A printhead element is no longer working.	If the location of the failed element affects printing, replace the printhead.
	The printhead is nearing the end of its life and should be replaced.	Replace the printhead.
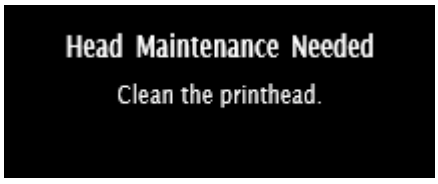	The printhead needs to be cleaned.	Follow the cleaning instructions in Cleaning the Printhead and Platen Roller on page 143.

Display	Possible Causes	Recommended Solutions
	**CAUTION: HOT SURFACE:** The printhead may be hot enough to cause severe burns. Allow the printhead to cool.	
	The printhead is over temperature.	Allow the printer to cool. Printing automatically resumes when the printhead elements cool to an acceptable operating temperature. If this error persists, consider changing where the printer is located or using a slower print speed.
The printer shows one of these messages, or it cycles back and forth between them:  	**CAUTION: HOT SURFACE:** An improperly connected printhead data or power cable can cause these error messages. The printhead may be hot enough to cause severe burns. Allow the printhead to cool.	
	The printhead data cable is not properly connected.	Hook up the printhead properly.
	The printhead has a faulty thermistor.	Replace the printhead.
	**CAUTION: HOT SURFACE:** An improperly connected printhead data or power cable can cause this error message. The printhead may be hot enough to cause severe burns. Allow the printhead to cool.	
	The printhead temperature is approaching its lower operating limit.	Continue printing while the printhead reaches the correct operating temperature. If the error remains, the environment may be too cold for proper printing. Relocate the printer to a warmer area.
	The printhead data cable is not properly connected.	Hook up the printhead properly.
	The printhead has a faulty thermistor.	Replace the printhead.

Display	Possible Causes	Recommended Solutions
	**CAUTION:** The cutter blade is sharp. Do not touch or rub the blade with your fingers. **NOTE:** If you have the linerless cutter option installed, go to Linerless Printing Issues for troubleshooting information.	
	The cutter blade is in the media path.	Turn off the printer power and unplug the printer. Inspect the cutter module for debris and clean as needed following the cleaning instructions in Cleaning and Lubricating the Standard Cutter Module on page 147.
	There is not enough memory to perform the function specified.	Free up some of the printer's memory by adjusting the label format or printer parameters. One way to free up memory is to adjust the print width to the actual width of the label instead of leaving the print width set to the default.
		Ensure that the data is not directed to a device that is not installed or is unavailable.
		If the problem persists, call a service technician.

Indicator Lights

The indicator lights located above the printer's display also communicate the printer's status.

Table 5 Status of Printer As Shown by Indicator Lights

Indicator Lights	What they indicate
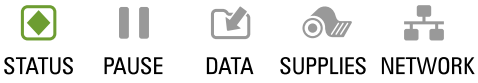 STATUS light steady green (other lights steady yellow for 2 seconds during printer power-up).	The printer is ready.
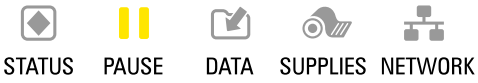 PAUSE light steady yellow.	The printer is paused.
 STATUS light steady red. SUPPLIES light steady red.	The media supply is out. The printer needs attention and cannot continue without user intervention.
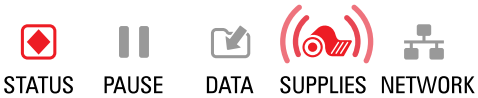 STATUS light steady red. SUPPLIES light flashing red.	The ribbon supply is out. The printer needs attention and cannot continue without user intervention.
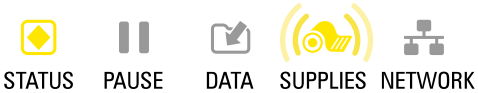 STATUS light steady yellow. SUPPLIES light flashing yellow.	The printer is in Direct Thermal mode, which does not require ribbon; however, ribbon is installed in the printer.
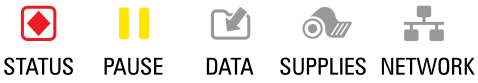 STATUS light steady red. PAUSE light steady yellow.	The printhead is open. The printer needs attention and cannot continue without user intervention.
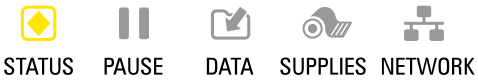 STATUS light steady yellow.	The printhead is over temperature.  **CAUTION—HOT SURFACE:** The printhead may be hot and could cause severe burns. Allow the printhead to cool.

Table 5 Status of Printer As Shown by Indicator Lights (Continued)

Indicator Lights	What they indicate
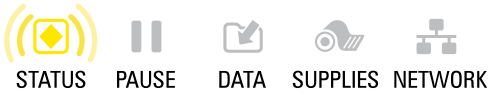 STATUS light flashing yellow.	Indicates one of the following: • The printhead is under temperature. **CAUTION:** This display message can be incorrect. The printhead may be hot and could cause severe burns. Allow the printhead to cool. • The main logic board (MLB) or power supply is over temperature.
 STATUS light steady red. PAUSE light steady red. DATA light steady red.	The printhead was replaced with one that is not a genuine Zebra printhead. Install a genuine Zebra printhead to continue.
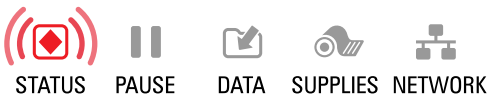 STATUS light flashing red.	The printer is unable to read the dpi setting of the printhead.
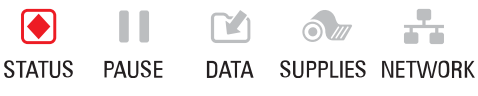 STATUS light steady red.	This indicates an error with the cutter. The cutter blade is in the media path. **CAUTION:** The cutter blade is sharp. Do not touch or rub the blade with your fingers.
Printers with a ZebraNet wired Ethernet option	
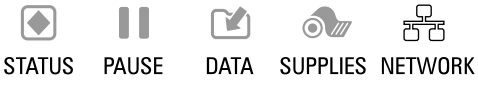 NETWORK light off.	No Ethernet link is available.
 NETWORK light steady green.	A 100 Base-T link was found.
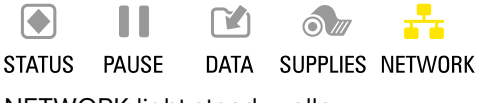 NETWORK light steady yellow.	A 10 Base-T link was found.
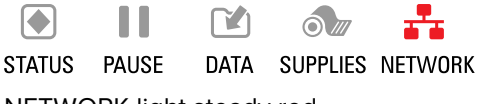 NETWORK light steady red.	An Ethernet error condition exists. The printer is not connected to your network.
Printers with a ZebraNet wireless option	

Table 5 Status of Printer As Shown by Indicator Lights (Continued)

Indicator Lights	What they indicate
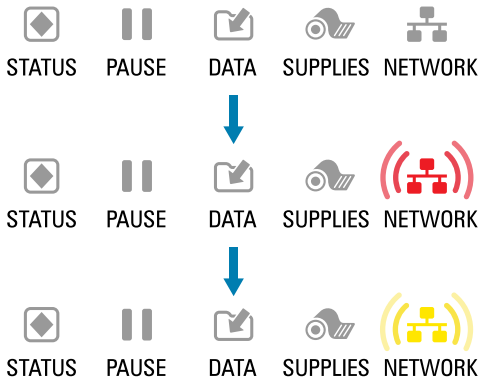 NETWORK light off. The light flashes red while the printer associates with the network. The light then flashes yellow while the printer is authenticating with the network.	A radio was found during power-up. The printer is attempting to associate with the network.
 NETWORK light steady green.	The radio is associated with your network and authenticated, and the WLAN signal is strong.
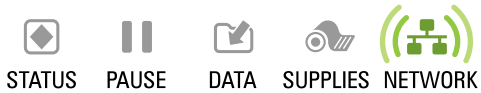 NETWORK light flashing green.	The radio is associated with your network and authenticated, but the WLAN signal is weak.
 NETWORK light steady red.	A WLAN error condition exists. The printer is not connected to your network.

Troubleshooting

Use this information to troubleshoot issues with the printer.

Printing or Print Quality Issues

Issue	Possible Cause	Recommended Solution
The barcode printed on a label does not scan.	The barcode is not within specifications because the printer is set at an incorrect darkness level or the printhead pressure is off.	**1.** Perform the steps in Running the Print Wizard and Printing a Test Label on page 77. **2.** If necessary, manually adjust the darkness or print speed settings. • Set the print darkness to the lowest setting that provides good print quality. If you set the darkness too high, the label image may print unclearly, barcodes may not scan correctly, the ribbon may burn through, or the printhead may wear prematurely. • Slower print speeds typically yield better print quality. Access the darkness and print speed settings from the Home screen by touching **Menu** > **Print** > **Print Quality**. **3.** If the issue is not resolved, check the printhead pressure and toggle position. See Adjusting the Printhead Pressure on page 133
	There is not enough blank space around the barcode.	Leave at least 3.2 mm (1/8 in.) between the barcode and other printed areas on the label and between the barcode and the edge of the label.
My label prints too small (or too large)	The wrong printer driver is being used, or other settings are not correct for your printing application.	Check the printer driver or software communications settings (if applicable) for your connection. You may wish to reinstall the printer driver following the instructions in Connecting the Printer to a Device on page 13.
Smudge marks on labels	The media or ribbon is not designed for high-speed operation.	Replace supplies with those recommended for high-speed operation. For more information, see zebra.com/supplies.
Poor results with thick labels	Incorrect printhead pressure.	Set the printhead pressure to the minimum needed for good print quality. SeeAdjusting the Printhead Pressure on page 133

Issue	Possible Cause	Recommended Solution
Printing is too light or too dark over the entire label	The media or ribbon is not designed for high-speed operation.	Replace supplies with those recommended for high-speed operation. For more information, see zebra.com/supplies.
	The printer is set at an incorrect darkness level.	For optimal print quality, set the darkness to the lowest possible setting for your application. **1.** Perform the steps in Running the Print Wizard and Printing a Test Label on page 77. **2.** If necessary, manually adjust the darkness or print speed settings. • Set the print darkness to the lowest setting that provides good print quality. If you set the darkness too high, the label image may print unclearly, barcodes may not scan correctly, the ribbon may burn through, or the printhead may wear prematurely. • Slower print speeds typically yield better print quality. Access the darkness and print speed settings from the Home screen by touching **Menu** > **Print** > **Print Quality**.
	You are using an incorrect combination of media and ribbon for your application.	Switch to a different type of media or ribbon to try to find a compatible combination. If necessary, consult your authorized Zebra reseller or distributor for information and advice.
	Incorrect printhead pressure.	If the issue is not resolved, check the printhead pressure and toggle position. See Adjusting the Printhead Pressure on page 133
Printing is too light or too dark on one side of the label	Uneven printhead pressure.	Adjust the printhead pressure as needed for good print quality. See Adjusting the Printhead Pressure on page 133

Issue	Possible Cause	Recommended Solution
General print quality issues	The printer is set at an incorrect print speed or darkness level. Keep in mind that printer settings may be affected by the driver or software being used.	For optimal print quality, set the darkness to the lowest possible setting for your application. **1.** Perform the steps in Running the Print Wizard and Printing a Test Label on page 77. **2.** If necessary, manually adjust the darkness or print speed settings. • Set the print darkness to the lowest setting that provides good print quality. If you set the darkness too high, the label image may print unclearly, barcodes may not scan correctly, the ribbon may burn through, or the printhead may wear prematurely. • Slower print speeds typically yield better print quality. Access the darkness and print speed settings from the Home screen by touching **Menu** > **Print** > **Print Quality**.
	You are using an incorrect combination of labels and ribbon for your application.	Switch to a different type of media or ribbon to try to find a compatible combination. If necessary, consult your authorized Zebra reseller or distributor for information and advice.
	The printhead is dirty.	Clean the printhead and platen roller. See Cleaning the Printhead and Platen Roller on page 143.
	Incorrect or uneven printhead pressure.	If the issue is not resolved, check the printhead pressure and toggle position. See Adjusting the Printhead Pressure on page 133
	The label format is scaling a font that is not scalable.	Check the label format for font issues.
Fine, angular gray lines on blank labels	Wrinkled ribbon.	See wrinkled ribbon causes and solutions in Miscellaneous Issues on page 194.
Long tracks of missing print on several labels	Print element damaged.	Call a service technician for assistance.
	Wrinkled ribbon.	See wrinkled ribbon causes and solutions in Ribbon Issues on page 180.

Issue	Possible Cause	Recommended Solution
Loss of printing registration on labels Excessive vertical drift in top-of-form registration	The platen roller is dirty.	Clean the printhead and platen roller. See Cleaning the Printhead and Platen Roller on page 143.
	Media guides are positioned improperly.	Ensure that the media guides are properly positioned. See Loading the Media on page 35.
	The media type is set incorrectly.	Set the printer for the correct media type (gap/notch, continuous, or mark).
	The media is loaded incorrectly.	Load media correctly. See Loading the Media on page 35.
Misregistration/skips labels	The printer is not calibrated.	Calibrate the printer. See Calibrating the Ribbon and Media Sensors on page 131.
	Improper label format.	Check your label format, and correct it as necessary.
Misregistration and misprint of one to three labels	The platen roller is dirty.	Clean the printhead and platen roller. See Cleaning the Printhead and Platen Roller on page 143.
	Media does not meet specifications.	Use media that meets specifications. See Media Specifications on page 221.
Vertical drift in top-of-form position	The printer is out of calibration.	Calibrate the printer. See Calibrating the Ribbon and Media Sensors on page 131.
	The platen roller is dirty.	Clean the printhead and platen roller. See Cleaning the Printhead and Platen Roller on page 143.
Horizontal movement in placement of the label image.	The previous labels were torn off incorrectly.	Pull down and to the left when tearing off labels so that the tear-off bar assists in tearing through the label backing. Pulling up or down and to the right can shift the media sideways.
Vertical image or label drift	The printer is using non-continuous labels but is configured in continuous mode.	Set the printer for the correct media type (gap/notch, continuous, or mark) and calibrate the printer, if necessary. See Calibrating the Ribbon and Media Sensors on page 131.
	The media sensor is calibrated improperly.	Calibrate the printer. See Calibrating the Ribbon and Media Sensors on page 131.
	The platen roller is dirty.	Clean the printhead and platen roller. See Cleaning the Printhead and Platen Roller on page 143.
	Improper printhead pressure settings (toggles).	Adjust the printhead pressure to ensure proper functionality. See Adjusting the Printhead Pressure on page 133.

Issue	Possible Cause	Recommended Solution
	The media or ribbon is loaded incorrectly.	Ensure that the media and ribbon are loaded correctly. See Loading the Ribbon on page 73 and Loading the Media on page 35.
	Incompatible media.	You must use media that meets the printer specifications. Ensure that the interlabel gaps or notches are 2 to 4 mm and consistently placed. See Media Specifications on page 221.

Ribbon Issues

See zebra.com/zt400-info for videos on resolving commonly-encountered issues.

Issue	Possible Cause	Recommended Solution
Broken or melted ribbon	Darkness is set too high.	1. Perform the steps in Running the Print Wizard and Printing a Test Label on page 77. 2. If necessary, manually adjust the darkness or print speed settings. • Set the print darkness to the lowest setting that provides good print quality. If you set the darkness too high, the label image may print unclearly, barcodes may not scan correctly, the ribbon may burn through, or the printhead may wear prematurely. • Slower print speeds typically yield better print quality. Access the darkness and print speed settings from the Home screen by touching **Menu** > **Print** > **Print Quality**. 3. Clean the printhead thoroughly. See Cleaning the Printhead and Platen Roller on page 143.

Issue	Possible Cause	Recommended Solution
	The ribbon is coated on the wrong side and cannot be used in this printer.	Replace the ribbon with one coated on the correct side. For more information, see Determining the Type of Ribbon to Use on page 72.
Wrinkled ribbon	Ribbon was loaded incorrectly.	Load the ribbon correctly. See Loading the Ribbon on page 73.
	Incorrect burn temperature.	**1.** Perform the steps in Running the Print Wizard and Printing a Test Label on page 77. **2.** If necessary, manually adjust the darkness or print speed settings. • Set the print darkness to the lowest setting that provides good print quality. If you set the darkness too high, the label image may print unclearly, barcodes may not scan correctly, the ribbon may burn through, or the printhead may wear prematurely. • Slower print speeds typically yield better print quality. Access the darkness and print speed settings from the Home screen by touching **Menu** > **Print** > **Print Quality**.
	Incorrect or uneven printhead pressure.	Set the printhead pressure to the minimum needed for good print quality. See Adjusting the Printhead Pressure on page 133.
	Media not feeding properly; “walking” from side to side.	Adjust the media guide until it just touches the edge of the media. If this does not solve the issue, check the printhead pressure. See Adjusting the Printhead Pressure on page 133. If necessary, call a service technician.
	The printhead or platen roller may be installed incorrectly.	Verify, if you can, that they are installed correctly. If necessary, call a service technician.
The printer does not detect when the ribbon runs out.	The printer may have been calibrated without ribbon or without the ribbon loaded properly.	**1.** Make sure that ribbon is loaded correctly so that it can be detected by the ribbon sensor. Under the printhead, the ribbon should track all the way back, near the printer’s firewall. See Loading the Ribbon on page 73. **2.** Calibrate the printer. See Calibrating the Ribbon and Media Sensors on page 131.
In thermal transfer mode, the printer did not detect the ribbon even though it is loaded correctly.		

Issue	Possible Cause	Recommended Solution
The printer indicates that ribbon is out, even though the ribbon is loaded correctly.	The printer was not calibrated for the label and ribbon being used.	Calibrate the printer. See Calibrating the Ribbon and Media Sensors on page 131.

Linerless Printing Issues

This section provides operating information and troubleshooting related to the linerless cutter option.

Cutter LED

The linerless cutter provides an LED that indicates the cutter status. You can view the glow from the LED (1) from the side of the cutter.

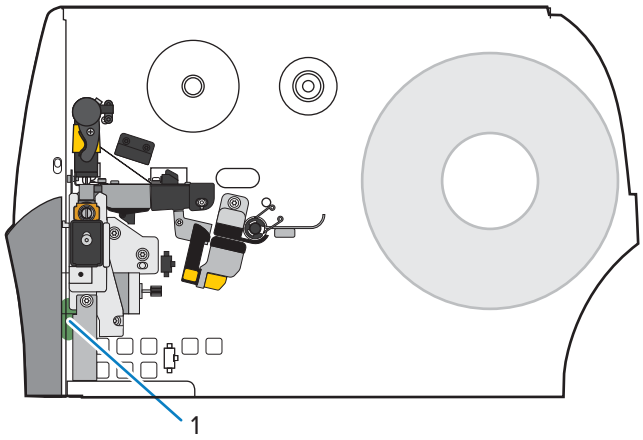

Cutter LED	Issue/Possible Cause	Recommended Solution
Off	The linerless cutter is not powered.	Do the following: • Verify that the printer power switch is in the On (I) position. • Check that the 10-pin cutter cable is plugged in on both ends: the cutter PCBA and the printer firewall. • Check the power connection to the printer's main logic board (MLB).
Solid Green	All conditions are good.	The cutter is ready.
Blinking Amber	Cutter jam	This could be caused by a recent cutter jam. If the cutter jam was addressed and the cutter is ready, close the cutter and feed a label to clear this condition. Verify the LED is now Green. Other possible causes: • Something is physically blocking the cutter blade from moving. • The cutter is not receiving 24V voltage from the printer. Check the fuse on the printer's MLB.

Cutter LED	Issue/Possible Cause	Recommended Solution
Solid Red	The cutter is open.	This is a normal condition when the cutter is pivoted open. To resolve this condition, do the following: • Check that the cutter is fully closed and flush with the printer. • If necessary, check that the cutter is correctly installed in the printer.
	The cutter module is separated from the housing, usually for maintenance purposes.	**CAUTION:** To avoid personal injury, turn Off **(O)** the printer before continuing. When it is safe to do so and all cutter maintenance is resolved, reinstall the cutter housing, and then turn On **(I)** the printer.
Blinking Red	The cutter upper or lower label-taken sensor was not detected.	
	The cutter-open sensor was not detected.	

Linerless Printing or Cutter Issues

Issue	Possible Cause	Recommended Solution
Issues with printing labels.	A command in the label format is changing the printer settings.	Check the label format for any commands that may be changing printer settings. For linerless cutter operation, the printer must be set to **Linerless Cut** mode and **Continuous** media.
Need the printed label length to match the configured label length.	The linerless cutter option supports a no-print zone (SGD command: `media.linerless_offset`), which increases the label length if the label top (ZPL command: `^LT`) value is positive.	Set the label top (`^LT`) value to zero if you do not want the label length to increase. Example A (increased printed label length): Setting the label top to 61 for a 203 dpi printer • Label length = 609 • Label Top = 61 • Printed label length (in dots) = 609 + 61 = 669 • Printed label length (in inches) = 3 + 0.3 = 3.3 in. • Printed label length (in mm) = 76 + 7.6 = 83.6 mm Example B (same printed label length): Setting the label top to 0 for a 203 dpi printer • Label length = 609 • Label Top = 0 • Printed label length (in dots) = 609 + 0 = 609 • Printed label length (in inches) = 3 + 0 = 3 in. • Printed label length (in mm) = 76 + 0 = 76 mm

<table>
<tr><th>Issue</th><th>Possible Cause</th><th>Recommended Solution</th></tr>
<tr><td>The first label printed is longer than subsequent labels.</td><td>The settings for System > Settings > Power Up Action and System > Settings > Head Close Action affect the length of the first label.</td><td>Change the setting to No Motion to keep the first label length the same as subsequent labels.</td></tr>
<tr><td>Frequent paper errors during printing or feeding.</td><td>Using zero or other small values for the linerless offset command (SGD command: <code>media.linerless_offset</code>) increases the likelihood of paper jams.</td><td>When possible, use the default value for <code>media.linerless_offset</code>, based on your printer dpi.
<table>
<tr><th></th><th>Minimum</th><th>Default (0.3 in.)</th><th>Max (0.375 in.)</th></tr>
<tr><td>203 dpi</td><td>0</td><td>61</td><td>76</td></tr>
<tr><td>300 dpi</td><td>0</td><td>90</td><td>113</td></tr>
<tr><td>600 dpi</td><td>0</td><td>180</td><td>225</td></tr>
</table></td></tr>
</table>

Issue	Possible Cause	Recommended Solution
PAPER ERROR	Media is wrapped around the platen roller.	**CAUTION—PRODUCT DAMAGE:** To avoid damaging the platen roller, do not cut against or scrape the surface of the roller. **1.** Open the printhead. **2.** Use a flat-blade screwdriver to rotate the platen roller backwards to release any trapped media. 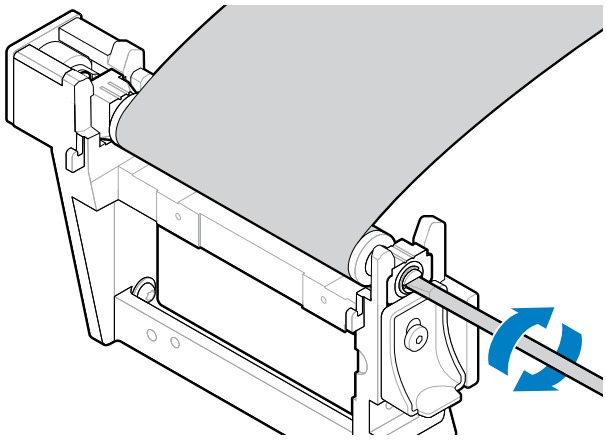 **3.** If the media is stuck to itself and cannot be released easily, remove the platen roller from the printer, and carefully remove the stuck media. Do not use any solvents or detergents to help remove the media. Replace the platen roller when through removing stuck media from it. **4.** Cut a straight edge on the undamaged media, and load the media through the cutter. **5.** Close the printhead. **6.** If the problem persists, make sure that the media is loaded correctly and that the platen roller is clear of debris. **7.** If the cutter continues to perform unsatisfactorily, contact an authorized service technician for assistance.

Issue	Possible Cause	Recommended Solution
	Media has jammed fanfold or accordion-style (crumpled) between the platen roller and the cutter.	**CAUTION—PRODUCT DAMAGE:** To avoid damaging the platen roller, do not cut against or scrape the surface of the roller. **1.** Open the printhead. **2.** Check for and remove any jammed media between the platen roller and cutter. If necessary, use a flat-blade screwdriver to rotate the platen roller backwards to release any trapped media. 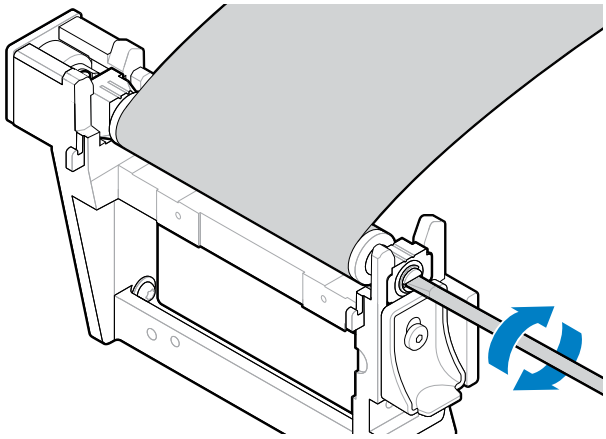 **3.** Cut a straight edge on the undamaged media, and load the media through the cutter. **4.** Close the printhead. **5.** Make sure that the printer is set to **Linerless cut** mode. Having the wrong setting can cause this issue.

Issue	Possible Cause	Recommended Solution
	The media has drifted to the right, so the label-taken sensor cannot detect it.	**1.** Ensure that the inboard edge of the media is fully under the label-taken sensor (1). If it is not, open the printhead, check that the roll of media is placed correctly on the media hanger, and adjust the media inward along the entire path. 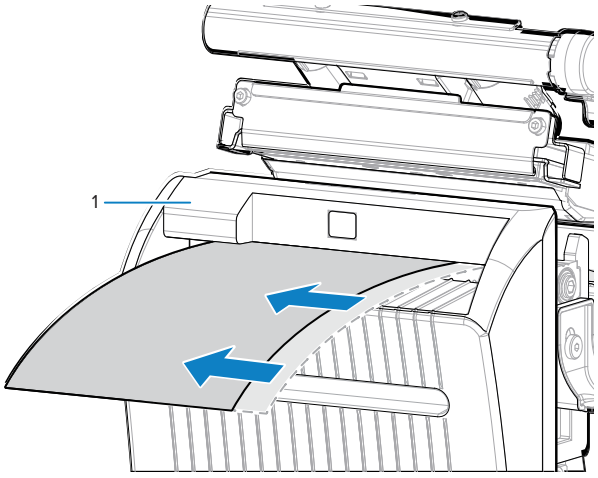 **2.** Check the media guides to ensure that they are just touching the edge of the media. 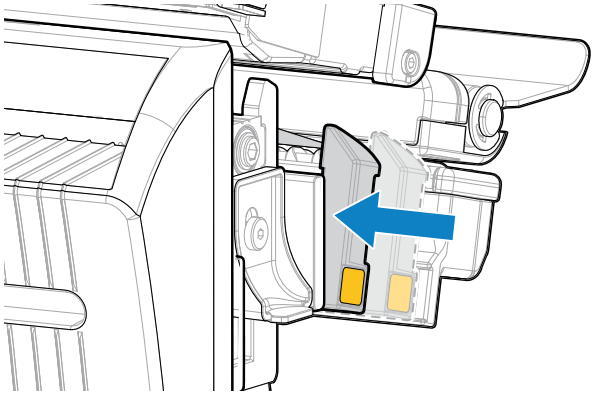 **3.** Close the printhead.
	The media is not loaded through the cutter.	Load media through the cutter.

Issue	Possible Cause	Recommended Solution
CUTTER ERROR	The cutter assembly is open.	**1.** Apply pressure to the gold square on the front of the cutter to snap the top of the cutter into place. 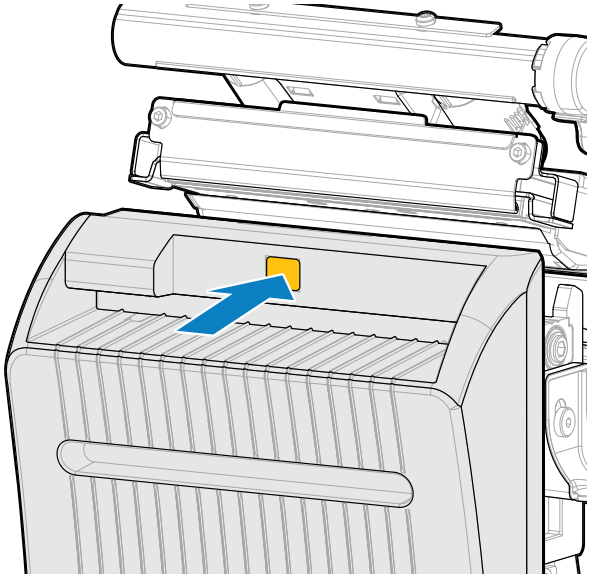 **2.** Open and close the printhead to clear the error. **3.** Press **PAUSE** to enable printing.

Issue	Possible Cause	Recommended Solution
	Debris and media scraps may have fallen behind the cutter and blocked the cutter-closed sensor.	**1.** Press down on the cutter release lever, and then pivot the cutter forward. 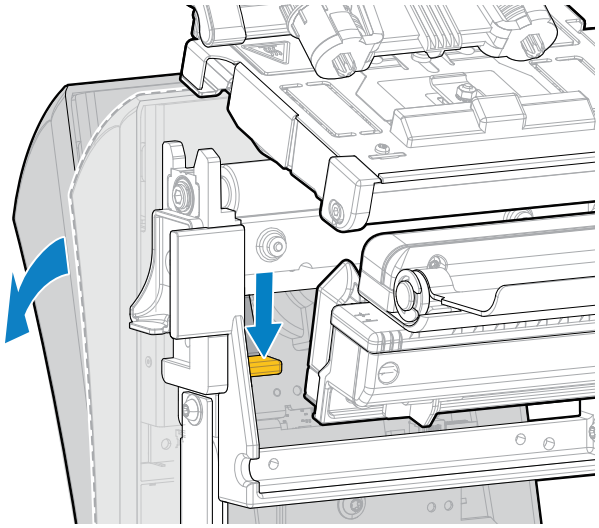 **2.** Clean out any debris blocking the cutter-close sensor. You may gently try to remove debris with a plastic spudger (no metal). 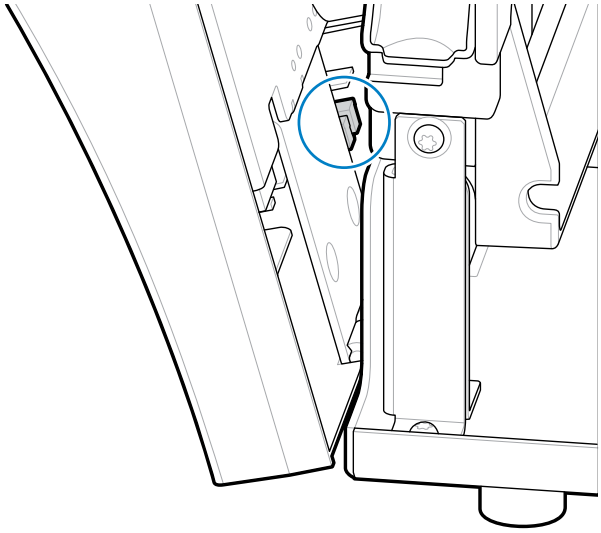 **3.** If necessary, remove the cutter from the printer to access the sensor and debris. **4.** After the sensor is cleared, reinstall the cutter and lock it into place. **5.** Open and close the printhead to clear the error.

RFID Issues

Issue	Possible Cause	Recommended Solution
The printer stops at the RFID inlay.	The printer calibrated the label length only to the RFID inlay instead of to the interlabel gap.	1. Tap **Menu** > **System** > **Settings**, and then select FEED for the Power Up and Head Close actions. 2. Manually calibrate the printer. See Performing Manual Sensor Calibration on page 132.
The printer voids every label.	The printer is not calibrated for the media being used.	Manually calibrate the printer. See Performing Manual Sensor Calibration on page 132.)
	You are using an RFID label with a tag type that is not supported by your printer.	These printers support only Gen 2 RFID labels. For more information, refer to RFID Programming Guide 3, or contact an authorized Zebra RFID reseller.
	The printer is unable to communicate with the RFID reader.	1. Turn off (**O**) the printer. 2. Wait 10 seconds. 3. Turn on (**I**) the printer. 4. If the problem persists, you may have a bad RFID reader or a loose connection between the RFID reader and the printer. Contact Technical Support or an authorized Zebra RFID service technician for assistance.
	Radio frequency (RF) interference from another RF source.	Do one or more of the following as necessary: • Move the printer away from fixed RFID readers or other RF sources. • Make sure that the media door is closed at all times during RFID programming.
	The settings are incorrect in your label designer software.	The software settings override the printer settings. Make sure that the software and printer settings match.
	You are using an incorrect programming position, particularly if the tags being used are within printer specifications.	Do one or more of the following as necessary: • Check the RFID programming position or the program position setting in your label designer software. If the position is incorrect, change the setting. • Restore the RFID programming position back to the default value. For more information, refer to RFID Programming Guide 3. For transponder placement details, go to zebra.com/transponders.

Issue	Possible Cause	Recommended Solution
	You are sending RFID ZPL or SGD commands that are incorrect.	Check your label formats. For more information, refer to RFID Programming Guide 3.
Low yields. Too many RFID tags per roll are voided.	The RFID labels are not within specifications for the printer, which means that the transponder is not in an area that can be programmed consistently.	Make sure that the labels meet transponder placement specifications for your printer. See zebra.com/transponders for transponder placement information. For more information, refer to RFID Programming Guide 3, or contact an authorized Zebra RFID reseller.
	Incorrect read and write power levels.	Change the RFID read and write power levels. For instructions, refer to RFID Programming Guide 3.
	Radio frequency (RF) interference from another RF source.	Do one or more of the following as necessary: • Move the printer away from fixed RFID readers. • Make sure that the media door is closed at all times during RFID programming.
	The printer is using outdated printer firmware and reader firmware versions.	Go to zebra.com/firmware for updated firmware.
RFID parameters do not appear in Setup mode, and RFID information does not appear on the printer configuration label. The printer does not void RFID labels that are not programmed correctly.	The printer was powered off (**O**) and then back on (**I**) too quickly for the RFID reader to initialize properly.	Wait at least 10 seconds after turning the printer power off before turning it back on. **1.** Turn off (**O**) the printer. **2.** Wait 10 seconds. **3.** Turn on (**I**) the printer. **4.** Check for the RFID parameters in Setup mode or for RFID information on a new configuration label.
	An incorrect version of printer firmware was loaded on the printer.	**1.** Verify that the correct firmware version is loaded on your printer. For more information, refer to RFID Programming Guide 3. **2.** Download the correct printer firmware if necessary. **3.** If the problem persists, contact Technical Support.

Issue	Possible Cause	Recommended Solution
	The printer is unable to communicate with the RFID subsystem.	**1.** Turn off (**O**) the printer. **2.** Wait 10 seconds. **3.** Turn on (**I**) the printer. **4.** If the problem persists, you may have a bad RFID reader or a loose connection between the RFID reader and the printer. Contact Technical Support or an authorized service technician for assistance.
The DATA light flashes indefinitely after you attempt to download printer or reader firmware.	The download was not successful. For optimal results, cycle power on the printer before downloading any firmware.	**1.** Turn off (**O**) the printer. **2.** Wait 10 seconds. **3.** Turn on (**I**) the printer. **4.** Attempt to download the firmware again. **5.** If the problem persists, contact Technical Support.

Communications Issues

Issue	Possible Cause	Recommended Solution
Label Formats Not Recognized		
A label format was sent to the printer but was not recognized. The DATA light does not flash.	The communication parameters are incorrect.	Check the printer driver or software communications settings (if applicable) for your connection. You may wish to reinstall the printer driver following the instructions in Connecting the Printer to a Device on page 13.
A label format was sent to the printer but was not recognized. The DATA light flashes but no printing occurs.	The prefix and delimiter characters set in the printer do not match the ones in the label format.	Verify the prefix and delimiter characters using the following SGD commands. Modify the values if necessary. • `! U1 getvar "zpl.format_prefix"` • `! U1 getvar "zpl.delimiter"`
	Incorrect data is being sent to the printer.	Check the communication settings on the computer. Ensure that they match the printer settings.
		If the problem persists, check the label format.
	The printer has an emulation active.	Verify that the label format matches the printer settings.
Labels Stop Printing Correctly		
A label format was sent to the printer. Several labels print, then the printer skips, misplaces, misses, or distorts the image on the label.	The serial communication settings are incorrect.	Ensure that the flow control settings match.
		Check the communication cable length. See Communication Interface Specifications on page 214 for requirements.
		Check the printer driver or software communications settings (if applicable).

Miscellaneous Issues

Issue	Possible Cause	Recommended Solution
Issues with the Display		
The control panel display shows a language that I cannot read	The language parameter was changed through the control panel or a firmware command.	1. On the Home screen, touch **Menu** (the icon on the bottom-left).  2. Touch the top selection on the screen. 3. Scroll through the language selections under this menu option. The selections for this parameter are displayed in the actual languages to make it easier for you to find one that you are able to read. 4. Touch the language that you want to display to select it. 5. Touch the **Home** icon to return to the Home screen.
The display is missing characters or parts of characters	The display may need replacing.	Call a service technician.
The USB Host Port Is Not Acknowledging a USB Device		
The printer is not acknowledging a USB device or is not reading the files on a USB device that is plugged into the USB host port.	The printer currently supports USB drives only up to 1 TB in size.	Use a USB drive that is 1 TB or smaller.
	The USB device may require its own external power.	If your USB device requires external power, make sure that it is plugged into a working power supply.
Printer Parameters Are Not Set As Expected		
Changes in parameter settings did not take effect. OR Some parameters changed unexpectedly.	A firmware setting or command prevented the ability to change the parameter.	Check your label formats or the settings of the software that you use to send formats to the printer. If necessary, refer to the Programming Guide for ZPL, ZBI, Set-Get-Do, Mirror, and WML or call a service technician. A copy of the manual is available at zebra.com/manuals.
	A command in a label format changed the parameter back to the previous setting.	
IP Address Changing		

Issue	Possible Cause	Recommended Solution
My printer reassigns a new IP address to the print server after the printer has been off for a while.	The settings for your network are causing the network to reassign a new IP address.	If the printer changing IP addresses causes issues for you, follow these steps to assign it a static IP address: **1.** Find out what values need to be assigned to the IP address, subnet mask, and gateway for your print server (wired, wireless, or both). **2.** Change the appropriate IP protocol value to PERMANENT. **3.** Change the values for the IP address, subnet mask, and gateway for the appropriate print server to what you want them to remain. **4.** Reset the network by touching **Menu** > **Connections** > **Networks** > **Reset Network** and then touching the checkmark to save the changes.
Cannot Connect through Wired or Wireless Connections		
I manually entered a wireless IP address, subnet, and gateway on my printer, but it won't connect to my wired or wireless network.	The printer's network must be reset after values are changed.	Reset the network by touching **Menu** > **Connections** > **Networks** > **Reset Network** and then touching the checkmark to save the changes.
	An ESSID value has not been specified.	**1.** For a wireless connection, specify the ESSID value that matches the value used by your wireless router using the following Set/Get/Do command: `! U1 setvar "wlan.essid" "value"` where "value" is the ESSID (sometimes called a network SSID) for your router. You can look on the back of your router for a sticker with the router's default information. **NOTE:** If the information has been changed from the default, check with your network administrator for the ESSID value to use. **2.** If the printer still does not connect, reset the network by touching **Menu** > **Connections** > **Networks** > **Reset Network** and then touching the checkmark to save the changes, and then power-cycle the printer.

Issue	Possible Cause	Recommended Solution
	The ESSID or other value was not specified correctly.	**1.** Print a network configuration label and verify that your values are correct. **2.** Make corrections as necessary. **3.** Reset the network by touching **Menu** > **Connections** > **Networks** > **Reset Network** and then touching the checkmark to save the changes.
Calibration Issues		
Auto Calibrate failed.	The media or ribbon is loaded incorrectly.	Ensure that the media and ribbon are loaded correctly. See Loading the Ribbon on page 73 and Loading the Media on page 35.
	The sensors could not detect the media or ribbon.	Calibrate the printer. See Calibrating the Ribbon and Media Sensors on page 131.
	The sensors are dirty or positioned improperly.	Ensure that the sensors are clean and properly positioned.
	The media type is set incorrectly.	Set the printer for the correct media type (gap/notch, continuous, or mark).
Non-continuous labels are being treated as continuous labels.	The printer was not calibrated for the media being used.	Calibrate the printer. See Calibrating the Ribbon and Media Sensors on page 131.
	The printer is configured for continuous media.	Set the printer for the correct media type (gap/notch, continuous, or mark).
Printer Locks Up		
All indicator lights are on, nothing is on the display, and the printer locks up.	Internal electronic or firmware failure.	Power cycle the printer. If the problem persists, call a service technician.
The printer locks up while booting up.	Main logic board failure.	

Servicing the Printer

If you have a problem using the printer, contact your facility's technical or systems support. If there is a problem with the printer, they will contact the Zebra Global Customer Support Center at zebra.com/support.

Gather the following information before contacting Zebra Global Customer Support:

- Serial number of the unit
- Model number or product name
- Firmware version number

Zebra responds to calls by e-mail, telephone, or fax within the time limits set forth in service agreements. If your problem cannot be solved by Zebra Global Customer Support, you may need to return your equipment for servicing and will be given specific directions.

If you purchased your product from a Zebra business partner, please contact that business partner for support.

Shipping the Printer

If you must ship the printer:

1. Turn off (**O**) the printer, and disconnect all cables.
2. Remove any media, ribbon, or loose objects from the printer interior.
3. Close the printhead.
4. Carefully pack the printer into the original container or a suitable alternate container to avoid damage during transit.

   A shipping container can be purchased from Zebra if the original packaging has been lost or destroyed.

IMPORTANT: Zebra is not responsible for any damages incurred during shipment if an approved shipping container is not used. Shipping the units improperly can possibly void the warranty.

ULINE H-8912
1-800-295-5510

Using a USB Host Port and the Print Touch Feature

The exercises presented here will help you learn how to use the optional USB host port and the printer's Print Touch feature with an Android™-based NFC-enabled device (such as a smartphone or a tablet).

Some SGD commands are listed as part of these exercises for advanced users.

Items Required for the Exercises

To perform the exercises in this document, you will need:

- a USB Flash drive that is up to 1 Terabyte (1 TB)



NOTE: The printer will not recognize drives larger than 1 TB.

- a USB keyboard.
- the various files listed in Files for Completing the Exercises.
- the free Zebra Utilities app for your smartphone (search for Zebra Technologies in the Google Play store).

Files for Completing the Exercises

Most of the files you need to complete the exercises in these section are available on zebra.com in the form of a .ZIP file located here. Copy these files to your computer before you begin the exercises. Where possible, the contents of the files are shown. Contents of files that include coded content—which cannot be viewed either as text or as an image—are not included.

File 1: `ZEBRA.BMP`



File 2: `SAMPLELABEL.TXT`

This simple label format prints the Zebra logo and a line of text at the end of the mirroring exercise.

```
^XA
^FO100,75^XGE:zebra.bmp^FS
^FO100,475^A0N,50,50^FDMirror from USB Completed^FS
^XZ
```

File 3: `LOGO.ZPL`

File 4: `USBSTOREDFILE.ZPL`

This label format prints an image and text. This file will be stored on the USB memory device at the root level so that it can be printed.

```
CT~~CD,~CC^~CT~
^XA~TA012~JSN^LT0^LH0,0^JMA^PR4,4~SD15^LRN^CI0^XZ
~DG000.GRF,07680,024,,[image data]
^XA
^LS0
^SL0
^BY3,3,91^FT35,250^BCN,,Y,N^FC%,{,#^FD%d/%m/%Y^FS
^FT608,325^XG000.GRF,1,1^FS
^FT26,75^A0N,28,28^FH\^FDThis label was printed from a format stored^FS
^FT26,125^A0N,28,28^FH\^FDon a USB Flash Memory drive. ^FS
^BY3,3,90^FT33,425^BCN,,Y,N
^FD>:Zebra Technologies^FS
^PQ1,0,1,Y^XZ
^XA^ID000.GRF^FS^XZ
```

File 5: `VLS_BONKGRF.ZPL`

This file is included in the .ZIP file located here.

File 6: `VLS_EIFFEL.ZPL`

This file is included in the .ZIP file located here.

File 7: KEYBOARDINPUT.ZPL

This label format, used for the USB keyboard input exercise, does the following:

- creates a barcode with the current date, based on your Real-Time Clock (RTC) setting
- prints the Zebra logo graphic
- prints fixed text
- ^FN prompts you to enter your name, and the printer prints what you entered

```
^XA
^CI28
^BY2,3,91^FT38,184^BCN,,Y,N^FC%,{,#^FD%d/%m/%Y^FS
^FO385,75^XGE:zebra.bmp^FS
^FT40,70^A0N,28,28^FH\^FDThis label was printed using a keyboard input. ^FS
^FT35,260^A0N,28,28^FH\^FDThis label was printed by:^FS
^FT33,319^A0N,28,28^FN1"Enter Name"^FS
^XZ
```

File 8: SMARTDEVINPUT.ZPL

This is the same label format as the previous label, only with different text printing. This format is used for the smart device input exercise.

```
^XA
^CI28
^BY2,3,91^FT38,184^BCN,,Y,N^FC%,{,#^FD%d/%m/%Y^FS
^FO385,75^XGE:zebra.bmp^FS
^FT40,70^A0N,28,28^FH\^FDThis label was printed using a smart device input.
 ^FS
^FT35,260^A0N,28,28^FH\^FDThis label was printed by:^FS
^FT33,319^A0N,28,28^FN1"Enter Name"^FS
^XZ
```

File 9: Firmware File

You may want to download a firmware file for your printer and copy it to your computer for use during the exercises. You may omit doing this if you wish.

You can download the latest firmware file from zebra.com/firmware.

USB Host

Your printer may be equipped with one or two USB host ports on the front panel. A USB host port allows you to connect USB devices—such as a keyboard, scanner, or USB Flash drive—to the printer. The exercises in this section will teach you how to perform USB mirror, how to transfer files to and from the printer, and how to provide information for which you are prompted and then print a label using that information.

IMPORTANT: When using a USB host port, files should be named only with 1 to 16 alphanumeric characters (A, a, B, b, C, c, ..., 0, 1, 2, 3, ...). Do not use Asian characters, Cyrillic characters, or accented characters in file names.

NOTE: Some functions may not work properly if there are underscores in a file name. Use periods instead.

Exercise 1: Copy Files to a USB Flash Drive and Perform USB Mirror

1. On your USB Flash Drive, create the following:



   - a folder called `Zebra`
   - in that folder, three subfolders:
     - `appl`
     - `commands`
     - `files`
2. In the `/appl` folder, place a copy of the latest firmware for your printer.
3. In the `/files` folder, place the following file:

   File 1: ZEBRA.BMP on page 199
4. In the `/commands` folder, place the following files:
   - File 2: SAMPLELABEL.TXT on page 199
   - File 3: LOGO.ZPL on page 199
5. Insert the USB Flash drive into a USB host port on the front of your printer.
6. Observe the control panel and wait.

   The following should happen:
   - If the firmware on the USB Flash drive is different than what is on the printer, the firmware downloads to the printer. The printer then restarts and prints a printer configuration label. (If there

is no firmware on the USB Flash drive or if the firmware version is the same, the printer skips this action.)

- The printer downloads the files in the `/files` folder and briefly shows the names of the files that are downloading on the display.
- The printer executes any files in the `/commands` folder.
- The printer restarts and then displays this message: `MIRROR PROCESSING FINISHED`

7. Remove the USB Flash drive from the printer.

Advance User Information	
See the Zebra Programming Guide for more information about these commands.	
To enable/disable mirroring:	`! U1 setvar "usb.mirror.enable" "value"` Values: `"on"` or `"off"`
To enable/disable automatic mirroring that occurs when a USB Flash drive is inserted into the USB host port:	`! U1 setvar "usb.mirror.auto" "value"` Values: `"on"` or `"off"`
To specify the number of times that the mirror operation will be repeated if it fails:	`! U1 setvar "usb.mirror.error_retry" "value"` Values: `0` to `65535`
To change the path to the location on the USB device from which mirror files are retrieved:	`! U1 setvar "usb.mirror.appl_path" "new_path"` Default: `"zebra/appl"`
To change the path to the location on the printer from which mirror files are retrieved:	`! U1 setvar "usb.host.lock_out" "value"` Default: `"zebra"`
To enable/disable the ability to use the USB port:	`! U1 setvar "usb.host.lock_out" "value"` Values: `"on"` or `"off"`

Exercise 2: Print a Label Format from a USB Flash Drive

The Print USB File option allows you to print files from a USB mass storage device, such as a USB Flash drive. Only printable files (`.ZPL` and `.XML`) may be printed from the USB mass storage device, and the files must be located at the root level, not in a directory.

1. Copy the following files to your USB Flash drive:
   - `File 4: USBSTOREDFILE.ZPL` on page 199
   - `File 5: VLS_BONKGRF.ZPL` on page 199
   - `File 6: VLS_EIFFEL.ZPL` on page 199
2. Insert the USB Flash drive into a USB host port on the front of your printer.

3. Tap **Menu** > **Storage** > **USB** > **Print: From USB**.

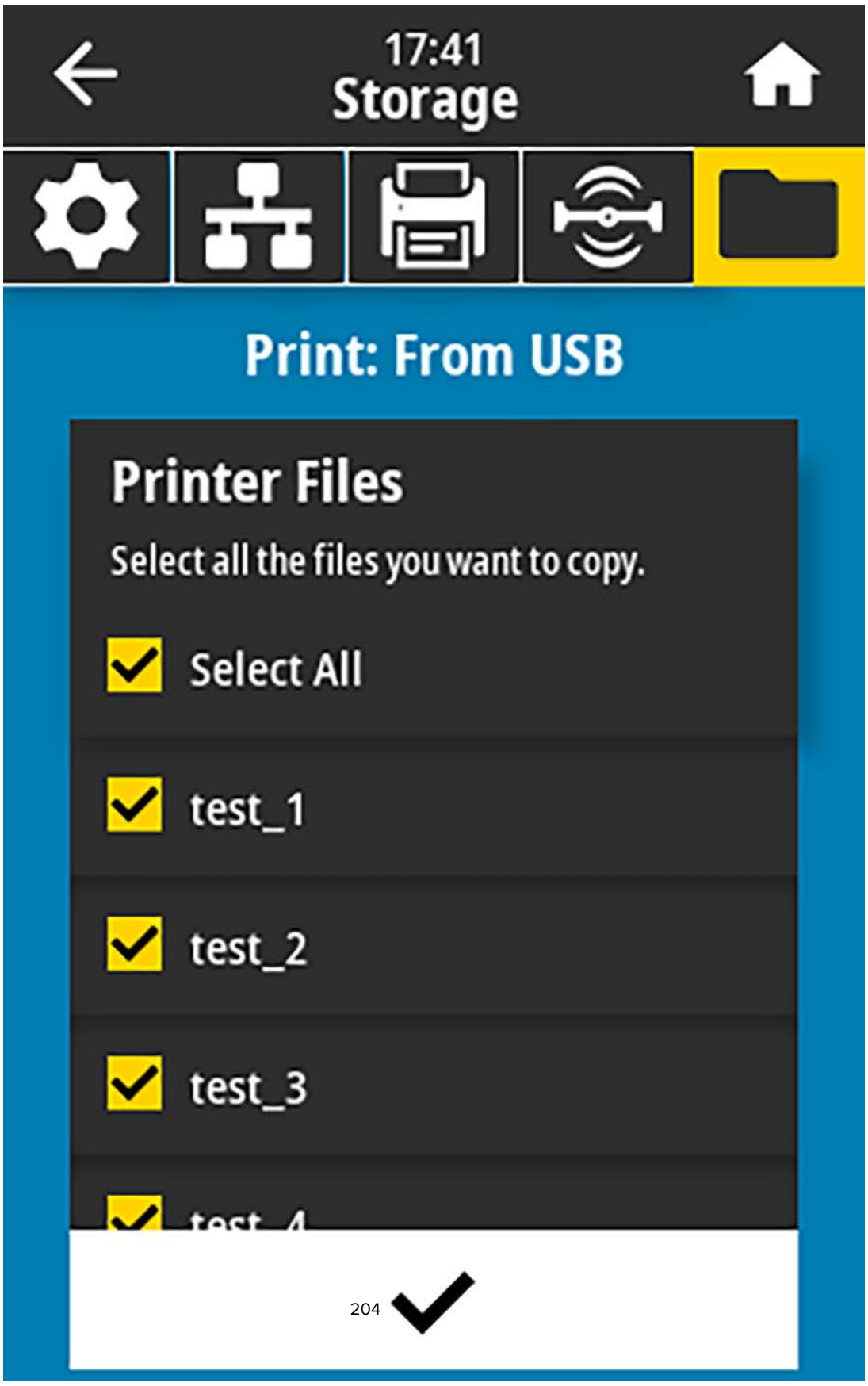
17:41
Storage
Print: From USB
Printer Files
Select all the files you want to copy.
Select All
test_1
test_2
test_3
test_4

204

The printer loads any executable files and processes them. The available files are listed. **SELECT ALL** is available to print all files on the USB Flash drive.

4. Select `USBSTOREDFILE.zpl`.
5. Touch the checkmark to copy the files.

   The label prints.

Exercise 3: Copy Files to/from a USB Flash Drive

The Copy USB File option allows you to copy files from a USB mass storage device to the printer's Flash memory E: drive.

1. Copy the following files to the root directory of your USB Flash drive.
   - `File 7: KEYBOARDINPUT.ZPL` on page 200
   - `File 8: SMARTDEVINPUT.ZPL` on page 200

NOTE: Do not put these files into a subfolder.

2. Insert the USB Flash drive into a USB host port on the front of your printer.
3. Tap **Menu** > **Storage** > **USB** > **Copy: Files to Printer**.

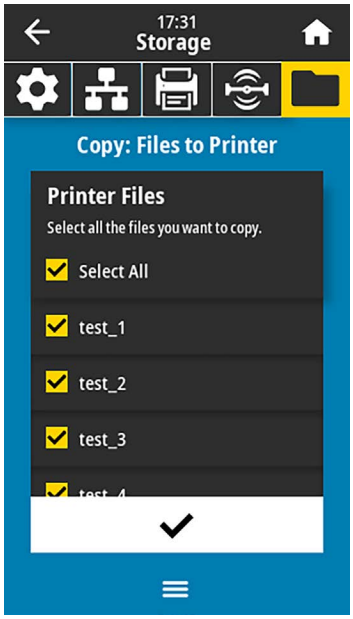

The printer loads any executable files and processes them. The available files are listed. (If desired, you can use **Select All** to copy all the available files from the USB Flash drive.)

4. Select the files `STOREFMT.ZPL`. and `STOREFMTM1.ZPL`.
5. Touch the checkmark to copy the files.

   The printer stores the files in `E:` memory.
6. Remove the USB Flash drive from the USB host port.

You can now copy these files from the printer to a USB Flash drive by tapping **Menu** > **Storage** > **USB** > **Copy: Files to USB**.



The option **SELECT ALL** is available to store all the available files from the printer to the USB Flash drive. Any `.ZPL` file that is copied will be post-processed so that the contents of the file will be suitable to be sent to a printer for normal execution.

Exercise 4: Enter Data for a Stored File with a USB Keyboard and Print a Label

The Print Station feature allows you to use a USB Human Interface Device (HID), such as a keyboard or a barcode scanner, to enter `^FN` field data into a `*.ZPL` template file.

1. After performing Exercise 3: Copy Files to/from a USB Flash Drive on page 205, plug a USB keyboard into a USB host port.

2. Tap **Menu** > **Print** > **Print Station**.

   The printer loads any executable files and processes them. The available files are listed.

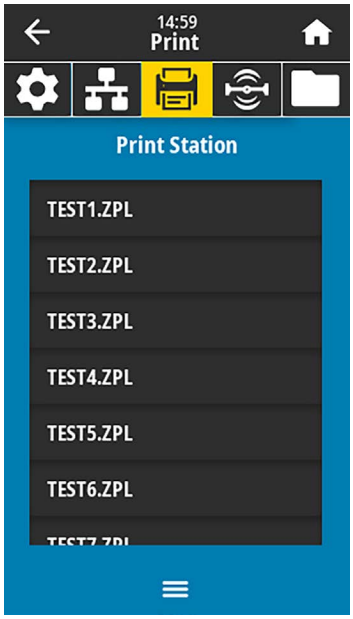

3. Select the file `KEYBOARDINPUT.ZPL`.

   The printer accesses the file and prompts you for the information in the `^FN` fields in the file. In this case, it prompts you for your name.

4. Type your name on the keyboard, and then press **<ENTER>**.

   The printer prompts for the number of labels to print.

5. Specify the desired quantity of labels, then press **<ENTER>** again.

   The specified number of labels is printed, with your name in the appropriate fields.

Print Touch/Near Field Communication (NFC)

The Zebra Print Touch feature allows you to touch an Android™-based, NFC-enabled device (such as a smart phone or tablet) to the printer's NFC logo to pair the device to the printer. This capability allows you to use your device to provide information for which you are prompted and then print a label using that information.

IMPORTANT: Some devices may not support NFC communication with the printer until you alter their settings. If you encounter difficulties, consult your service provider or your smart device manufacturer for more information.

Figure 12 NFC Logo Location

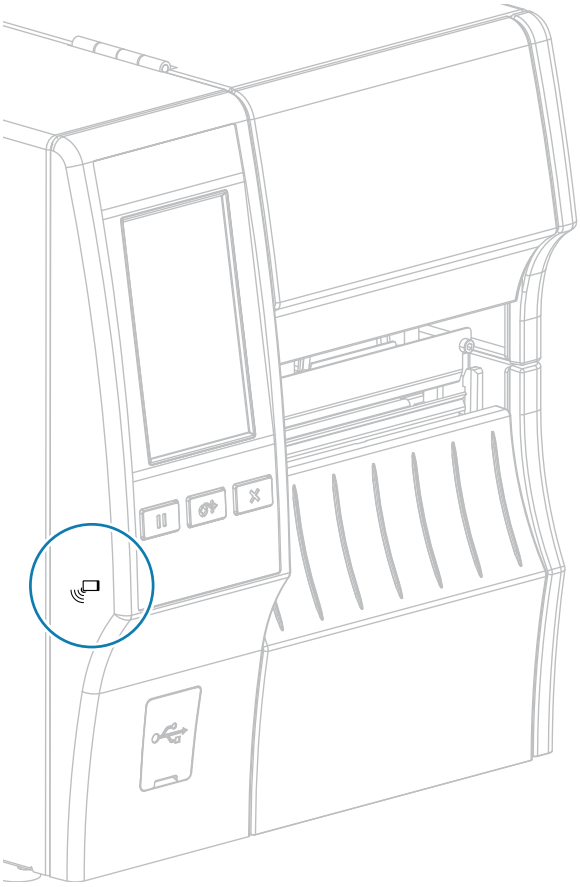

Exercise 5: Enter Data for a Stored File with a Device and Print a Label

The steps in this exercise may vary somewhat based on:

- your device (phone or tablet)
- your service provider
- whether you already have the free Zebra Utilities app installed on your device

Refer to the Zebra Bluetooth User Guide for specific instructions for configuring your printer to use a Bluetooth interface. A copy of this manual is available at zebra.com/manuals.

1. Copy the `SMARTDEVINPUT.ZPL` file to your device.
2. If you do not have the Zebra Utilities app installed on your device, go to the app store for your device, search for the Zebra Setup Utilities app, and install it.
3. If your phone supports NFC, pair your device with the printer by holding the device next to the NFC icon on the printer. Otherwise, pair using the Bluetooth settings on your device.

   a) If necessary, access the Bluetooth information about your printer using your device. For instructions, refer to the manufacturer's documentation for your device.

   b) If necessary, select the Zebra printer's serial number to pair it with the device.

   c) After your device has been detected by the printer, the printer may prompt you to accept or reject the pairing. If necessary, tap **ACCEPT**. Some devices will pair with the printer without this prompt.

   The printer and your device are paired.
4. Start the Zebra Utilities app on your device.

   The Zebra Utilities main menu displays.

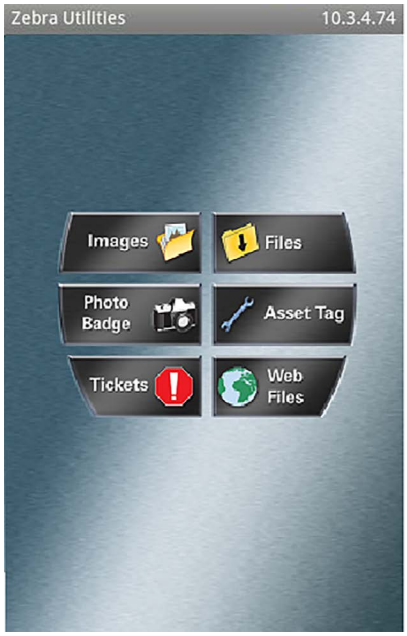

5. Tap **Available Files**.

   The smart device gets data from the printer and displays it.

NOTE: This retrieval process may take a minute or more to complete.

6. Scroll through the formats shown and select `SMARTDEVINPUT.ZPL`.

   Based on the `^FN` field in the label format, the device prompts you for your name.

7. Enter your name at the prompt.
8. Change the quantity of labels to print, if desired.
9. Tap **Send to Printer** to print the label.

Specifications

This section lists general printer specifications, printing specifications, ribbon specifications, and media specifications.

General Specifications

		ZT411	ZT421
Height*		325 mm (12.8 in.)	325 mm (12.8 in.)
Width		274 mm (10.8 in.)	335 mm (13.2 in.)
Depth*		500 mm (19.7 in.)	500 mm (19.7 in.)
Weight		16 kg (36 lb)	18 kg (40 lb)
Temperature	Operating	Thermal Transfer: 5° to 40°C (40°F to 105°F) Direct Thermal: 0° to 40°C (32°F to 105°F)	
	Storage	–40° to 60°C (–40°F to 140°F)	
Relative Humidity	Operating	20% to 85%, non-condensing	
	Storage	5% to 85%, non-condensing	
Memory		256 MB RAM (8 MB user available) 512 MB Flash (64 MB user available on-board Flash)	

NOTE:

* Applies to base printer model. Dimensions may vary depending on configuration, such as adding the optional rewind or linerless cutter.

Power Specifications

The following are typical values. Actual values vary from unit to unit and are affected by such things as the options installed and the printer settings

	ZT411	ZT421
Electrical	100–240 VAC, 50-60 Hz	
Power consumption	120 VAC, 60 Hz	
Inrush Current	< 35A peak8A RMS (half cycle)	< 40A peak8A RMS (half cycle)
Energy Star Off Power (W)	0.08	0.08
Energy Star Sleep Power (W)	4.14	4.14
Print Power* (W)	98	215
Print Power* (VA)	108	261
Power consumption	230 VAC, 50 Hz	
Inrush Current	< 80A peak12A RMS (half cycle)	< 90A peak15A RMS (half cycle)
Energy Star Off Power (W)	0.18	0.18
Energy Star Sleep Power (W)	4.26	4.26
Print Power* (W)	97	209
Print Power* (VA)	127	261

NOTE: * Printing Pause self test labels at 6 ips with 4x6-in. or 6.5x4 in. labels, darkness 10, and direct thermal media.

Power Cord Specifications

Depending on how your printer was ordered, a power cord may or may not be included. If one is not included, or if the one that is included is not suitable for your requirements, consider the following information.

CAUTION—PRODUCT DAMAGE: For personnel and equipment safety, always use an approved three-conductor power cord specific to the region or country intended for installation. This cord must use an IEC 320 female connector and the appropriate region-specific, three-conductor grounded plug configuration.

Figure 13 Power Cord Specifications

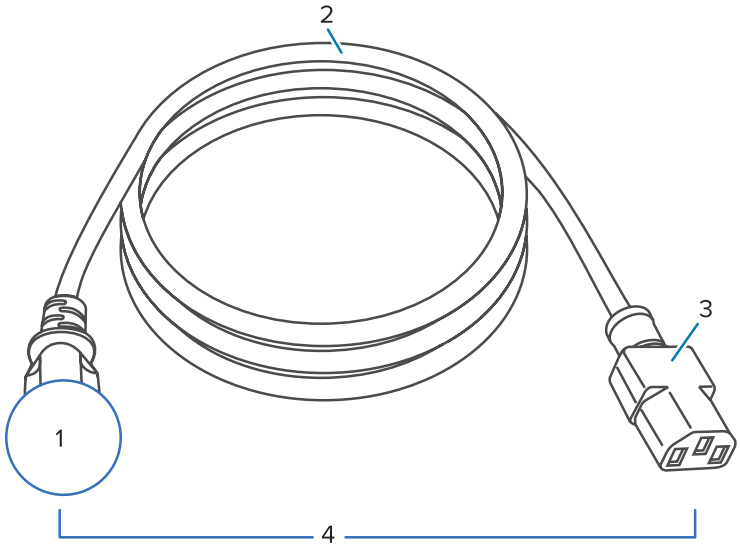

1	AC power plug for your country—This should bear the certification mark of at least one of the known international safety organizations (see Figure 14 International Safety Organization Certification Symbols on page 213). The chassis ground (earth) must be connected to ensure safety and reduce electromagnetic interference.
2	3-conductor HAR cable or other cable approved for your country.
3	IEC 320 connector—This should bear the certification mark of at least one of the known international safety organizations (see Figure 14 International Safety Organization Certification Symbols on page 213).
4	Length ≤ 3 m (9.8 ft). Rating 10 Amp, 250 VAC.

Figure 14 International Safety Organization Certification Symbols



Communication Interface Specifications

Figure 15 Location of Communication Interfaces

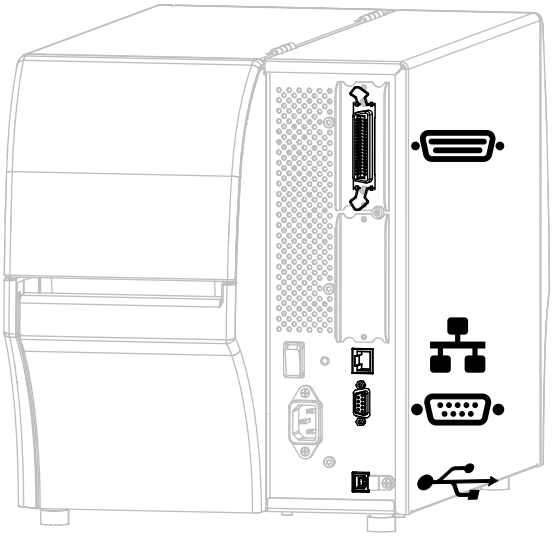

	Parallel port		Internal wired Ethernet print server
	Serial port		USB port

NOTE: You must supply all data cables for your application. The use of cable strain relief clamps is recommended.

Ethernet cables do not require shielding, but all other data cables must be fully shielded and fitted with metal or metalized connector shells. Unshielded data cables may increase radiated emissions above the regulated limits.

To minimize electrical noise pickup in the cable:

- Keep data cables as short as possible.
- Do not bundle the data cables tightly with the power cords.
- Do not tie the data cables to power wire conduits.

Standard Connections

Your printer supports a variety of standard connections.

Bluetooth Version 4.1

This feature is available only on certain models. To determine if your printer includes this feature, look at the part number sticker inside the media compartment. It is usually located below the media hanger.

The part number follows this format:

`Part Number: ZTxxxxx – Xxxxxxxx`

If the ending string of the part number (`Xxxxxxxx`) begins with the letter `P`, your printer does NOT include this feature.

Limitations and requirements	Many mobile devices can communicate with the printer within a 9.1-m (30-ft) radius of the printer.
Connections and configuration	Refer to the Zebra Bluetooth User Guide for specific instructions for configuring your printer to use a Bluetooth interface. This manual is available at zebra.com/manuals.

Two USB Host Ports

This feature is available only on certain models. To determine if your printer includes this feature, look at the part number sticker inside the media compartment. It is usually located below the media hanger.

The part number follows this format:

`Part Number: ZTxxxxx – Xxxxxxxx`

If the ending string of the part number (`Xxxxxxxx`) begins with the letter `P`, your printer does NOT include this feature.

Limitations and requirements	You can plug only one device into each of the printer's two USB host ports. You cannot use a third device by plugging it into a USB port on one of the devices, nor can you use an adapter to split a USB host port on the printer to accept more than one device at a time.
Connections and configuration	No additional configuration is necessary.

Zebra PrintTouch/Near Field Communication (NFC)

Limitations and requirements	NFC communication must be initiated by touching your device to the appropriate location on the printer.
Connections and configuration	Some devices may not support NFC communication with the printer until you alter their settings.

USB 2.0 Data Interface

Limitations and requirements	A maximum cable length of 5m (16.4 ft).
Connections and configuration	No additional configuration is necessary.

Wired 10/100 Ethernet Print Server (Internal)

This standard ZebraNet Ethernet option stores network configuration information in the printer. An optional Ethernet connection stores configuration information on a removable print server board, which can be shared between printers.

Limitations and requirements	• The printer must be configured to use your LAN. • A second wired print server can be installed in the bottom option slot.
Connections and configuration	Refer to the ZebraNet Wired and Wireless Print Servers User Guide for configuration instructions. This manual is available at zebra.com/manuals.

RS-232/C Serial Data Interface

Specifications	• 2400 to 115000 baud • parity, bits/character • 7 or 8 data bit • XON-XOFF, RTS/CTS, or DTR/DSR handshake protocol required • 750mA at 5 V from pins 1 and 9
Limitations and requirements	• You must use a null-modem cable to connect to the printer or a null-modem adapter if using a standard modem cable. • Maximum cable length of 15.24 m (50 ft). • You may need to change printer parameters to match the host computer.
Connections and configuration	The baud rate, number of data and stop bits, the parity, and the XON/XOFF or DTR control must match those of the host computer.

Optional Connections

Your printer support these connectivity options.

Wireless Print Server

Specifications	See Wireless Specifications on page 218 for details.
Limitations and requirements	• Can print to the printer from any computer on your Wireless Local Area Network (WLAN). • Can communicate with the printer through the printer's web pages. • The printer must be configured to use your WLAN. • Can be installed only in the top option slot.
Connections and configuration	Refer to the ZebraNet Wired and Wireless Print Servers User Guide for configuration instructions. A copy of this manual is available at zebra.com/manuals.

ULINE H-8912
1-800-295-5510

IEEE 1284 Bidirectional Parallel data interface

Limitations and requirements	• Maximum cable length of 3 m (10 ft) • Recommended cable length of 1.83 m (6 ft) • No printer parameter changes required to match the host computer. • Can be installed in either the top or bottom option slot. • An IEEE 1284 cable is required.
Connections and configuration	No additional configuration is necessary.

Applicator Interface

Requirements	Must have a DB15F connector.

Wired 10/100 Ethernet Print Server (External)

This ZebraNet Ethernet option allows you to program network configuration information to the print server, which can be shared between printers. The standard Ethernet connection stores configuration information on the printer itself.

Requirements	Must have the parallel data interface option.

Wireless Specifications

Antenna Information

Type	• Patch; Gain = 3.66dBi @ 2.4GHz; Gain = 3.19dBi @ 5GHz; Impedance = 50 ohms • Omni directional antenna gain 3dBi @ 2.4GHz; 5dBi @ 5GHz • PCBA antenna gain = –30dBi @ 900MHz

WLAN Specifications

802.11 b	• 2.4 GHz • DSSS (DBPSK, DQPSK, and CCK) • RF power 17.77 dBm (EIRP)
802.11 g	• 2.4 GHz • OFDM (16-QAM and 64-QAM with BPSK, and QPSK) • RF power 18.61 dBm (EIRP)
802.11 n	• 2.4 GHz • OFDM (16-QAM and 64-QAM with BPSK, and QPSK) • RF power 18.62 dBm (EIRP)
802.11 a/n	• 5.15-5.25 GHz, 5.25-5.35 GHz, 5.47-5.725 GHz • OFDM (16-QAM and 64-QAM with BPSK and QPSK) • RF power 17.89 dBm (EIRP)
802.11 ac	• 2.4 GHz, 5.18 - 5.24 GHz, 5.26-5.32 GHz, 5.5-5.7 GHz • OFDM (up to 256-QAM with BPSK and QPSK) • RF power 13.39 dBm (EIRP)

802.11 ax	• 2.4 GHz, 5.18 - 5.24 GHz, 5.26-5.32 GHz, 5.5-5.72 GHz, 5.745-5.825 GHz
	• OFDM (up to 256-QAM with BPSK and QPSK)
	• RF power (EIRP)
	  • 9 dBm (BDR/EDR/LE)
	  • 17 dBm (2.4G WLAN)
	  • 19 dBm (UNII-1)
	  • 18 dBm (UNII-2)
	  • 18 dBm (UNII-3)

Printing Specifications

	ZT411	ZT421
Print resolution	203 dpi (dots/in.) 8 dots/mm	203 dpi (dots/in.) 8 dots/mm
	300 dpi 12 dots/mm	300 dpi 12 dots/mm

		ZT411	ZT421
		600 dpi 24 dots/mm	N/A
Maximum print width	203 dpi	104 mm (4.09 in.)	168 mm (6.6 in.)
	300 dpi	104 mm (4.09 in.)	168 mm (6.6 in.)
	600 dpi	104 mm (4.09 in.)	N/A
Programmable constant print speeds	Linerless media	61 mm to 254 mm per second in 25.4-mm increments 2.4 in. to 10 in. per second in 1-in. increments	N/A
	Other media with 203 dpi printhead	61 mm to 356 mm per second in 25.4-mm increments 2.4 in. to 14 in. in 1-in. increments	61 mm to 305 mm per second in 25.4-mm increments 2.4 in. to 12 in. in 1-in. increments
	Other media with 300 dpi printhead	61 mm to 254 mm per second in 25.4-mm increments 2.4 in. to 10 in. in 1-in. increments	61 mm to 254 mm per second in 25.4-mm increments 2.4 in. to 10 in. in 1-in. increments
	Other media with 600 dpi printhead	38 mm to 102 mm per second in 25.4-mm increments 1.5 in. to 4 in. in 1-in. increments	N/A
Dot size (nominal) (width x length)	203 dpi	0.125 mm x 0.125 mm 0.0049 in. x 0.0049 in.	0.125 mm x 0.125 mm 0.0049 in. x 0.0049 in.
	300 dpi	0.084 mm x 0.099 mm 0.0033 in. x 0.0039 in.	0.084 mm x 0.099 mm 0.0033 in. x 0.0039 in.
	600 dpi	0.042 mm x 0.042 mm 0.0016 in. x 0.0016 in.	N/A
First dot location (measured from the inside edge of the media)	203 dpi	3.5 mm ± 1.25 mm 0.14 in. ± 0.05 in.	2.5 mm ± 0.9 mm 0.10 in. ± 0.035 in.
	300 dpi	2.1 mm ± 1.25 mm 0.08 in. ±0.05 in.	2.5 mm ± 0.9 mm 0.10 in. ± 0.035 in.

		ZT411	ZT421
	600 dpi	2.1 mm ± 1.25 mm 0.08 in. ± 0.05 in.	N/A
Barcode modulus (X) dimension			
Picket fence (nonrotated) orientation	203 dpi	4.9 mil to 49 mil	5 mil to 50 mil
	300 dpi	3.3 mil to 33 mil	3.3 mil to 33 mil
	600 dpi	1.6 mil to 16 mil	N/A
Ladder (rotated) orientation	203 dpi	4.9 mil to 49 mil	5 mil to 50 mil
	300 dpi	3.9 mil to 39 mil	3.9 mil to 39 mil
	600 dpi	1.6 mil to 16 mil	N/A
Vertical registration	all print speeds and dpi	±1.0 mm 0.04 in.	±1.0 mm 0.04 in.

Media Specifications

			ZT411	ZT421
Label length	Minimum	Non-RFID		
		Tear-off	12.7 mm (0.5 in.)	12.7 mm (0.5 in.)
		Peel-off	12.7 mm (0.5 in.)	12.7 mm (0.5 in.)
		Automation Friendly Extended Peel	38.1 mm (1.5 in.)	N/A
		Rewind	12.7 mm (0.5 in.)	12.7 mm (0.5 in.)
		Cutter	25.4 mm (1.0 in.)	25.4 mm (1.0 in.)
		Linerless cutter	51 mm (2.0 in.)	N/A
		RFID	Varies for each transponder type	
	Maximum	200 or 300 dpi	991 mm (39 in.)	991 mm (39 in.)
		600 dpi	508 mm (20 in.)	N/A
Maximum continuous media print length		200 dpi	3988 mm (157 in.)	2590 mm (102 in.)
		300 dpi	1854 mm (73 in.)	1143 mm (45 in.)
		600 dpi	991 mm (39 in.)	N/A
Label width	Minimum	Non-RFID	25.4 mm (1.0 in.)	51 mm (2 in.)
		RFID	Varies for each transponder type	
	Maximum	Tear-off, Cutter	114 mm (4.5 in.)	178 mm (7.0 in.)

			ZT411	ZT421
		Linerless cutter	109 mm (4.3 in.)	N/A
		Peel-off, Rewind	108 mm (4.25 in.)	171 mm (6.75 in.)
Total thickness (includes liner, if any)		Minimum	0.058 mm (0.0023 in.)	0.058 mm (0.0023 in.)
		Maximum	0.25 mm (0.010 in.)	
Maximum roll outside diameter			203 mm on a 76-mm inside diameter core 8 in. on a 3-in. inside diameter core	
Inter-label gap*		Minimum	2 mm (0.079 in.)	
		Preferred	3 mm (0.118 in.)	
		Maximum	4 mm (0.157 in.)	
Ticket/tag notch size (width x length)*			6 mm x 3 mm (0.25 in. x 0.12 in.)	
Hole diameter*			3.18 mm (0.125 in.)	
Notch or hole position (centered from inner media edge)*		Minimum	3.8 mm (0.15 in.)	
		Maximum	57 mm (2.25 in.)	90 mm (3.5 in.)
Density, in Optical Density Units (ODU) (black mark)*			> 1.0 ODU	
Maximum media density*			≤ 0.5 ODU	
Transmissive media sensor			11 mm (7/16 in.) from inside edge	

* Not applicable to linerless media.

Ribbon Specifications

Standard printers use ribbon that is coated on the outside. An optional ribbon spindle is available to use ribbon that is coated on the inside. Contact your authorized Zebra reseller for ordering information.

	ZT411	ZT421
Ribbon width MINIMUM*	51 mm** (2 in.**)	51 mm** (2 in.**)
Ribbon width MAXIMUM	110 mm (4.33 in.)	174 mm (6.85 in.)
Ribbon length MAXIUMUM	450 m (1476 ft)	
Ribbon core inside diameter	25 mm (1 in.)	
Ribbon roll outside diameter MAXIMUM	81.3 mm (3.2 in.)	

* Zebra recommends using ribbon that is at least as wide as the media to protect the printhead from wear.

** Depending on your application, you may be able to use ribbon narrower than 51 mm (2 in.), as long as the ribbon is wider than the media being used. To use a narrower ribbon, test the ribbon's performance with your media to assure that you get the desired results.

Glossary

alphanumeric

Indicating letters, numerals, and characters such as punctuation marks.

backfeed

When the printer pulls the media and ribbon (if used) backward into the printer so that the beginning of the label to be printed is properly positioned behind the printhead. Backfeed occurs when operating the printer in Tear-Off and Applicator modes.

barcode

A code by which alphanumeric characters can be represented by a series of adjacent stripes of different widths. Many different code schemes exist, such as the universal product code (UPC) or Code 39.

black mark media

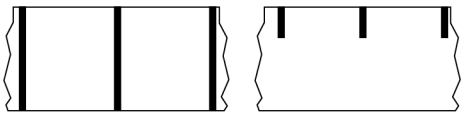

Media with registration marks found on the underside of the print media that act as start-of-label indications for the printer. The reflective media sensor is the generally-selected option for use with black mark media.

Contrast this with continuous media on page 224 or gap/notch media on page 225.

calibration (of a printer)

collection method

Select a media collection method that is compatible with your printer options. Selections include tear-off, peel-off, cutter, and rewind. The basic media and ribbon loading instructions are the same for all collection methods with some additional steps necessary for using any media collection options.

configuration

The printer configuration is a group of operating parameters specific to the printer application. Some parameters are user selectable, while others are dependent on the installed options and mode of operation. Parameters may be switch selectable, control panel programmable, or downloaded as ZPL II commands. A configuration label listing all the current printer parameters may be printed for reference.

continuous media

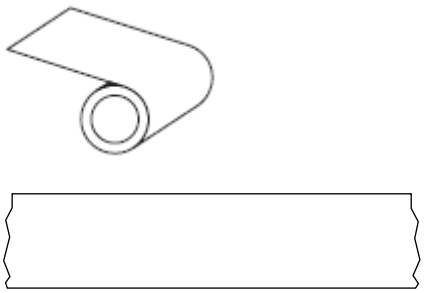

A transmissive (gap) sensor is typically used for the printer to detect when the media runs out.

Contrast this with black mark media on page 223 or gap/notch media on page 225.

core diameter

The inside diameter of the cardboard core at the center of a roll of media or ribbon.

diagnostics

Information about which printer functions are not working that is used for troubleshooting printer problems.

die-cut media

A type of label stock that has individual labels stuck to a media liner. The labels may be lined up against each other or separated by a small distance. Typically the material surrounding the labels has been removed. (See non-continuous media on page 228.)

direct thermal

A printing method in which the printhead presses directly against the media. Heating the printhead elements causes a discoloration of the heat-sensitive coating on the media. By selectively heating the printhead elements as the media moves past, an image is printed onto the media. No ribbon is used with this printing method.

Contrast this with thermal transfer on page 231.

direct thermal media

Media that is coated with a substance that reacts to the application of direct heat from the printhead to produce an image.

fanfold media

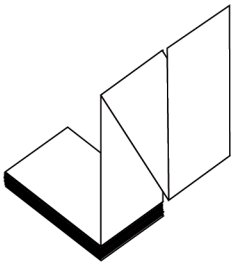

Non-continuous media that comes folded in a rectangular stack and folded in a zigzag pattern. Fanfold media is either gap-notch media or black mark media, meaning it uses black marks or notches to track media format positioning.

Fanfold media can have the same label separations as non-continuous roll media. The separations fall either on or near the folds.

Contrast this with roll media on page 230.

firmware

This is the term used to specify the printer's operating program. This program is downloaded to the printer from a host computer and stored in flash memory. Each time the printer power is turned on, this operating program starts. This program controls when to feed the media forward or backward and when to print a dot on the label stock.

FLASH memory

Non-volatile memory that maintains the stored information intact when power is off. This memory area is used to store the printer's operating program. Can also be used to store optional printer fonts, graphic formats, and complete label formats.

font

A complete set of alphanumeric characters in one style of type. Examples include CG Times™, CG Triumvirate Bold Condensed™.

gap/notch media

Media that contains a separation, notch, or hole, indicating where one label/printed format ends and the next begins.

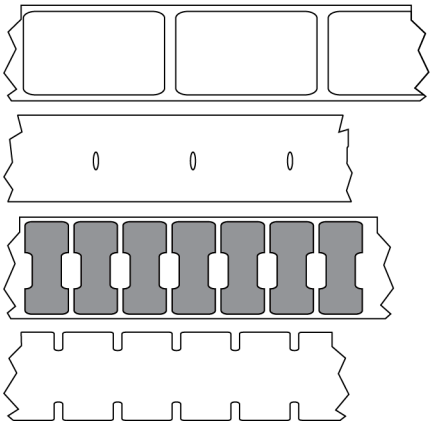

Contrast this with black mark media on page 223 or continuous media on page 224.

ips (inches-per-second)

The speed at which the label or tag is printed. Many Zebra printers can print from 1 ips to 14 ips.

label

An adhesive-backed piece of paper, plastic, or other material on which information is printed. A non-continuous label has a defined length, as opposed to a continuous label or a receipt which can have a varying length.

label backing (liner)

The material on which labels are affixed during manufacture and which is discarded or recycled.

label type

The printer recognizes the following label types.

Continuous



Gap/Notch

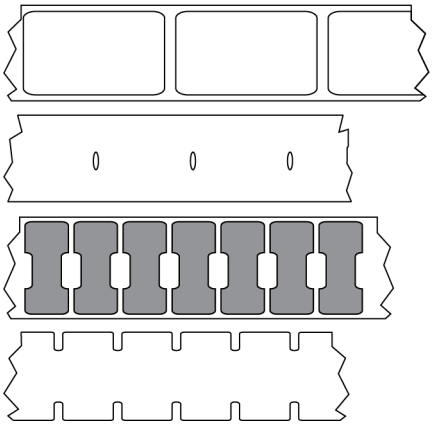

Mark

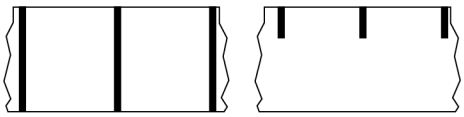

LED (light emitting diode)

Indicators of specific printer status conditions. Each LED is either off, on, or blinking depending on the feature being monitored.

linerless media

Linerless media does not use backing to keep the layers of labels on a roll from sticking to one another. It is wound like a roll of tape, with the sticky side of one layer in contact with the non-sticky surface of the one below it.

Depending on the printer, individual labels may be separated by perforations, or they can be cut apart with a linerless cutter. Because there is no liner, more labels can potentially fit on a roll, cutting down the need to change media as often.

Linerless media is considered an environmentally friendly option because no backing is wasted, and the cost per label can be less than that of standard labels.

Zebra recommends using Zebra ZeroLiner direct thermal linerless media.

LCD (liquid crystal display)

A backlit display that provides the user with either operating status during normal operation or option menus when configuring the printer to a specific application.

mark media

See black mark media on page 223.

media

Material onto which data is printed by the printer. Types of media include: tag stock, die-cut labels, continuous labels (with and without media liner), non-continuous media, fanfold media, and roll media.

media sensor

This sensor is located behind the printhead to detect the presence of media and, for non-continuous media, the position of the web, hole, or notch used to indicate the start of each label.

media supply hangar

The stationary arm that supports the media roll.

non-continuous media

Media that contains an indication of where one label/printed format ends and the next one begins. Types of non-continuous media include gap-notch media and black mark media. (Contrast this with continuous media.)

Non-continuous roll media usually comes in the form of labels with an adhesive backing on a liner. Tags (or tickets) are separated by perforations.

Individual labels or tags are tracked and position-controlled using one of these methods:

- Web media separates labels by gaps, holes, or notches.

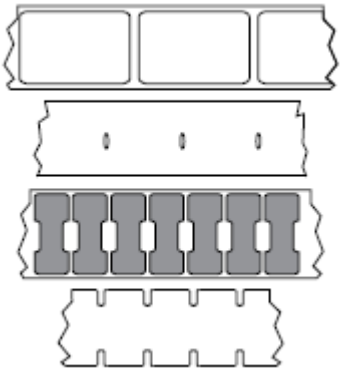

- Black mark media uses pre-printed black marks on the back side of the media to indicate label separations.



- Perforated media has holes—to allow the labels or tags to be separated from each other easily—along with position-control marks, notches, or label gaps.



non-volatile memory

Electronic memory that retains data even when the power to the printer is turned off.

notched media

A type of tag stock containing a cutout area that can be sensed as a start-of-label indicator by the printer. This is typically a heavier, cardboard-like material that is either cut or torn away from the next tag. See gap/notch media on page 225.

peel-off mode

A mode of operation in which the printer peels a printed label away from the backing and allows the user to remove it before another label is printed. Printing pauses until the label is removed.

perforated media

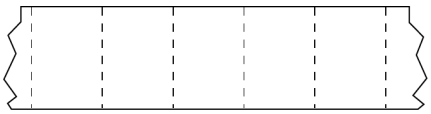

Media with perforations that allow the labels or tags to be separated from each other easily. The media may also have black marks or other separations between labels or tags.

print speed

The speed at which printing occurs. For thermal transfer printers, this speed is expressed in terms of inches per second (ips).

print type

The print type specifies whether the type of media being used requires ribbon to print. Thermal transfer media requires ribbon while direct thermal media does not.

printhead wear

Radio frequency identification (RFID) "smart" media

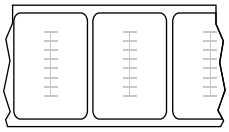

Each RFID label has an RFID transponder (sometimes called an "inlay"), made of a chip and an antenna, embedded between the label and the liner. The shape of the transponder varies by manufacturer and is visible through the label. All "smart" labels have memory that can be read, and many have memory that can be encoded.

RFID media can be used in a printer that is equipped with an RFID reader/encoder. RFID labels are made from the same materials and adhesives as non-RFID labels.

receipt

A receipt is a variable length printout. One example of a receipt is in retail stores, where each purchased item occupies a separate line on the printout. Therefore, the more items purchased, the longer the receipt.

registration

Alignment of printing with respect to the top (vertical) or sides (horizontal) of a label or tag.

ribbon

Ribbon is a thin film that is coated on one side with wax, resin, or wax resin (usually called ink), which is transferred to the media during the thermal transfer process. Ink is transferred onto the media when heated by the small elements within the printhead.

Ribbon is only used with the thermal transfer print method. Direct thermal media does not use ribbon. When ribbon is used, it must be as wide as or wider than the media being used. If the ribbon is narrower than the media, areas of the printhead are unprotected and subject to premature wear. Zebra ribbons have a coating on the back that protects the printhead from wear.

ribbon wrinkle

A wrinkling of the ribbon caused by improper alignment or improper printhead pressure. This wrinkle can cause voids in the print and/or the used ribbon to rewind unevenly. This condition should be corrected by performing adjustment procedures.

roll media

Media that comes supplied rolled onto a core (usually cardboard). It can be continuous (no separations between labels)

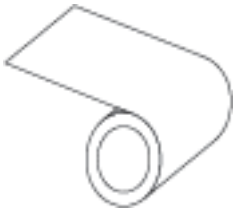

or non-continuous (some type of separation between labels).

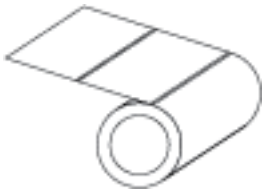

Contrast this with fanfold media on page 225.

supplies

A general term for media and ribbon.

symbology

The term generally used when referring to a barcode.

tag stock

A type of media having no adhesive backing but featuring a hole or notch by which the tag can be hung on something. Tags are usually made of cardboard or other durable material and are typically perforated between tags. Tag stock can come on rolls or in a fanfold stack. (See gap/notch media on page 225.)

tear-off mode

A mode of operation in which the user tears the label or tag stock away from the remaining media by hand.

thermal transfer

A printing method in which the printhead presses an ink or resin coated ribbon against the media. Heating the printhead elements causes the ink or resin to transfer onto the media. By selectively heating the printhead elements as the media and ribbon move past, an image is printed onto the media.

Contrast this with direct thermal on page 224.

void

A space on which printing should have occurred, but did not due to an error condition such as wrinkled ribbon or faulty print elements. A void can cause a printed barcode symbol to be read incorrectly or not at all.