ULINE **S-7488**

SELF-SEAL MULTI-DEPTH MAILER

HOLDS 1-2 CDS

1-800-295-5510
uline.com

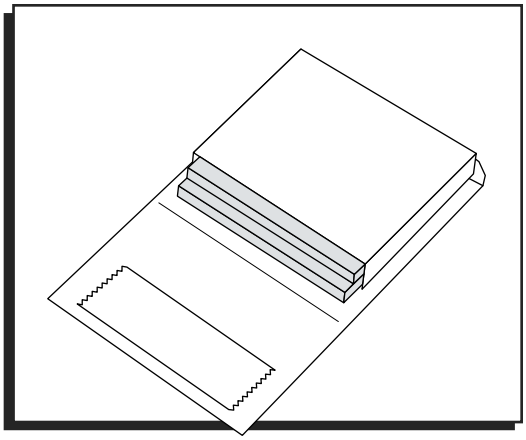

ASSEMBLY

1. Lay mailer flat with white side facing down. Place product on B panel. (See Figure 1)

Figure 1

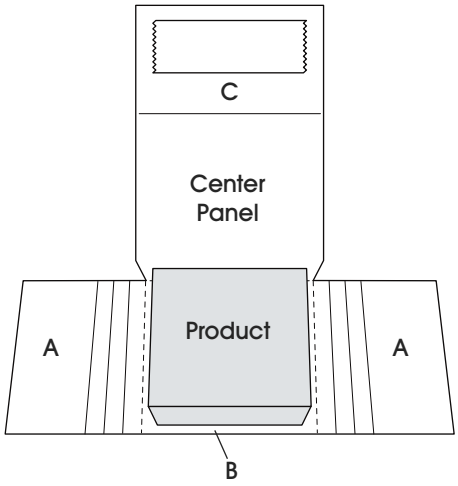

2. Determine height needed. Fold A panels over product at the desired-height scores. (See Figure 2)

Figure 2

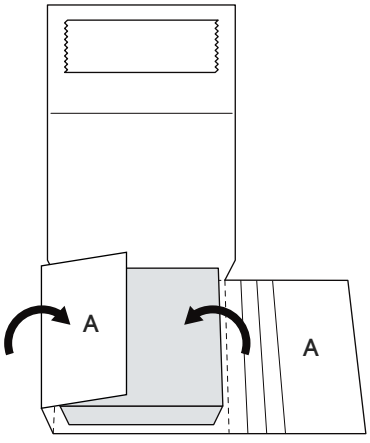

3. While holding A panels against product, fold product over onto center panel. A panels should remain under the product. (See Figure 3)

Figure 3

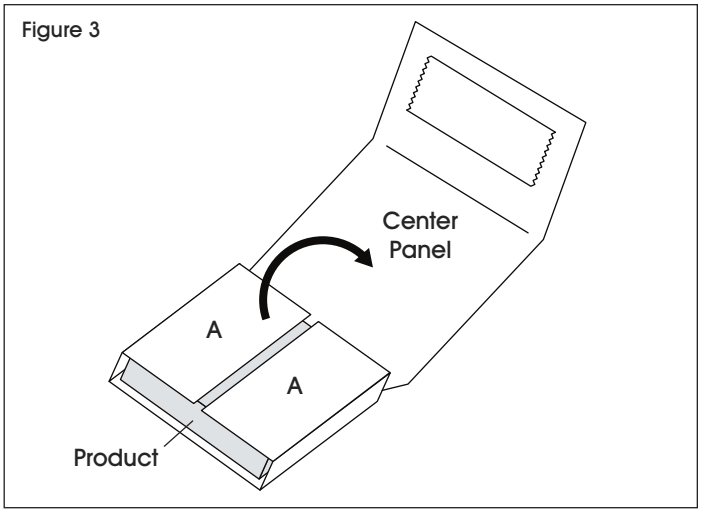

4. Remove liner from adhesive strip on C panel. (See Figure 4)

Figure 4

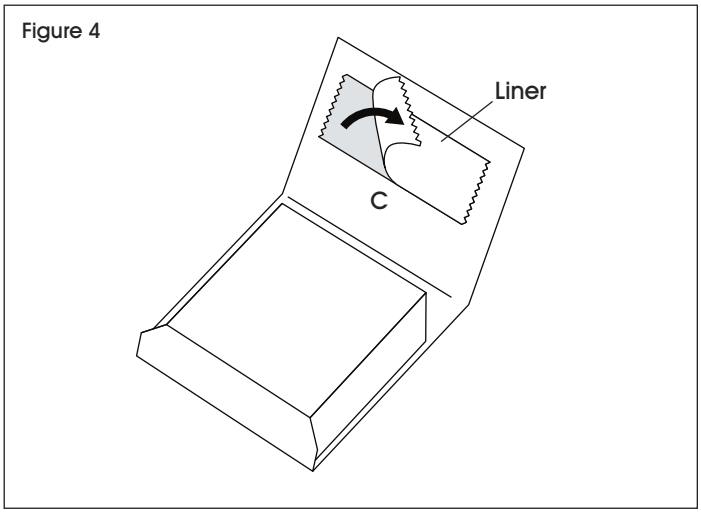

5. Fold C panel over B panel at same height score used for A panels. Press down on edge of C panel to secure adhesive strip to B panel. (See Figure 5)

Figure 5

