Para Español, vea página 2.
Pour le français, consulter la page 3.

ULINE H-10195, H-10196 H-10197

1-800-295-5510
uline.com

1-PEDESTAL WORKBENCH

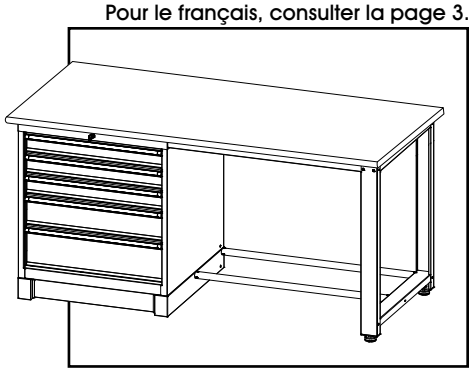

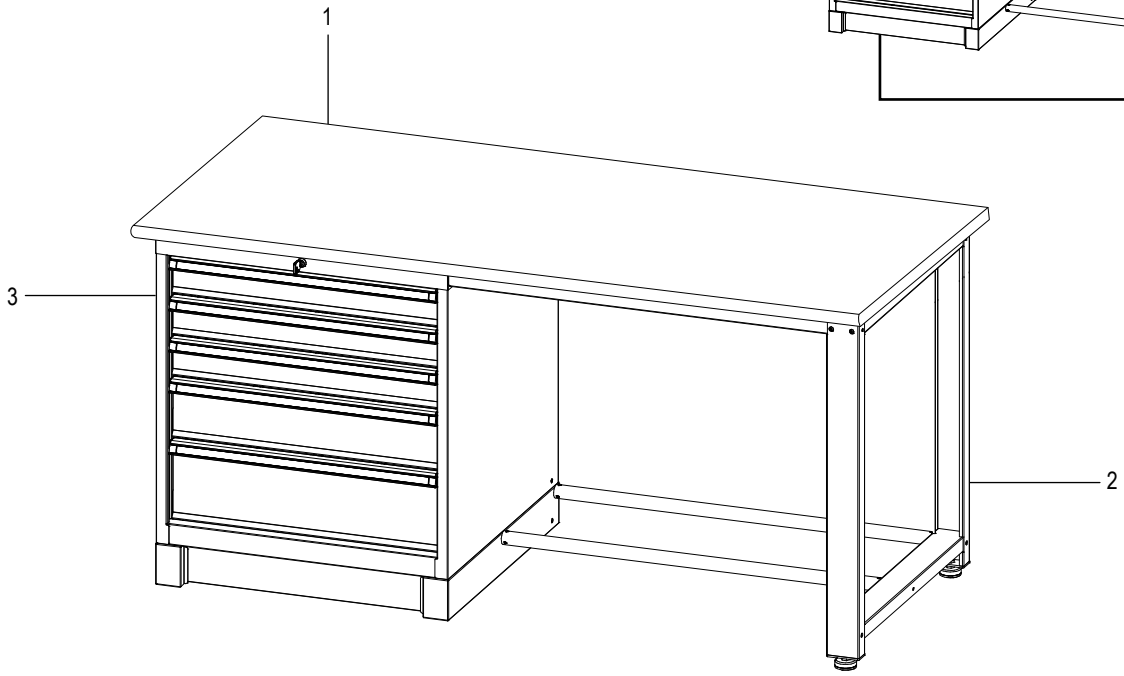

INDIVIDUAL PARTS

#	DESCRIPTION	QTY.	ULINE PART NO.	MFG. PART NO.
1	Tabletop – 60 x 30", Laminate	1	H-1135-LTOP	----------
1	Tabletop – 60 x 30", Maple with Rounded Edge	1	H-1135-MTOP	----------
1	Tabletop – 60 x 30", Stainless Steel	1	H-1135-SSTOP	H-1135-SSTOP
1	Tabletop – 72 x 30", Laminate	1	H-1137-LTOP	----------
1	Tabletop – 72 x 30", Maple with Rounded Edge	1	H-1137-MTOP	----------
1	Tabletop – 72 x 30", Stainless Steel	1	H-1137-SSTOP	----------
1	Tabletop – 96 x 30", Laminate	1	H-2484-LTOP	PLT3096
1	Tabletop – 96 x 30", Maple with Rounded Edge	1	H-2484-MTOP	----------
1	Tabletop – 96 x 30", Stainless Steel	1	H-2484-SSTOP	H-2484-SSTOP
2	Frame – 60 x 30"	1	H-10195FRAME	TBAA6030
2	Frame – 72 x 30"	1	H-10196FRAME	TBAA7230
2	Frame – 96 x 30"	1	H-10197FRAME	TBAA9630
3	Modular Drawer Cabinet – 5 Drawer	1	H-8421	TBCH337505

PARTS SOLD AS A KIT (NOT SHOWN)

REPLACEMENT HARDWARE KIT				
#	DESCRIPTION	QTY. IN KIT	ULINE KIT NO.	MFG. KIT NO.
—	Allen Bolt – M6 x 20 mm	17	H-10198	TBAA7230.LJ
	Hex Head Tapping Screw – ST6.3 x 25 mm	12		
	Leveling Foot	2		
	Allen Wrench	1		

ULINE H-10195, H-10196
H-10197

MESA DE TRABAJO DE 1 PEDESTAL

800-295-5510
uline.mx

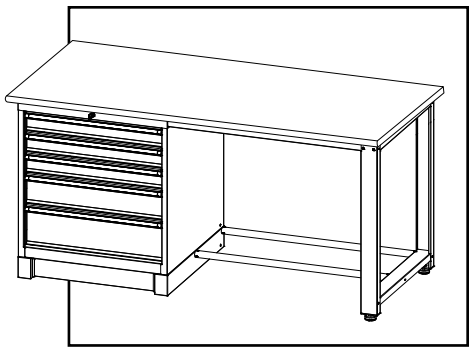

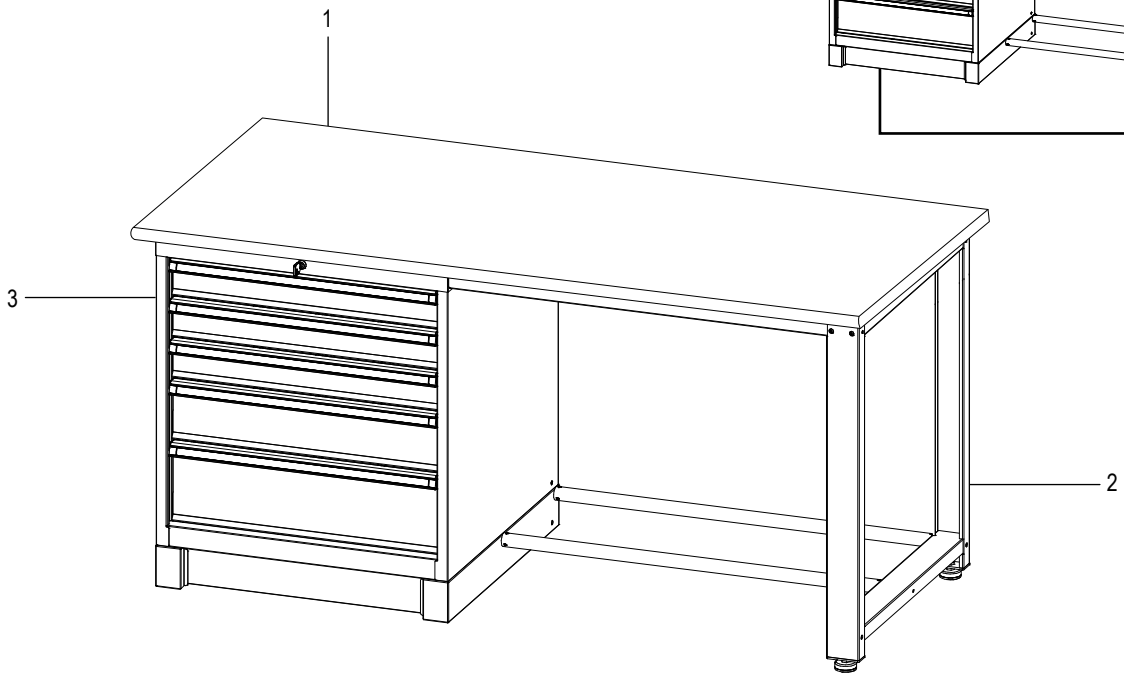

PARTES INDIVIDUALES

#	DESCRIPCIÓN	CANT.	NO. DE PARTE DE ULINE	NO. DE PARTE DEL FABRICANTE
1	Cubierta – 60 x 30", Plástico Laminado	1	H-1135-LTOP	----------
1	Cubierta – 60 x 30", Arce con Borde Redondeado	1	H-1135-MTOP	----------
1	Cubierta – 60 x 30", Acero Inoxidable	1	H-1135-SSTOP	H-1135-SSTOP
1	Cubierta – 72 x 30", Plástico Laminado	1	H-1137-LTOP	----------
1	Cubierta – 72 x 30", Arce con Borde Redondeado	1	H-1137-MTOP	----------
1	Cubierta – 72 x 30", Acero Inoxidable	1	H-1137-SSTOP	----------
1	Cubierta – 96 x 30", Plástico Laminado	1	H-2484-LTOP	PLT3096
1	Cubierta – 96 x 30", Arce con Borde Redondeado	1	H-2484-MTOP	----------
1	Cubierta – 96 x 30", Acero Inoxidable	1	H-2484-SSTOP	H-2484-SSTOP
2	Armazón – 60 x 30'	1	H-10195FRAME	TBAA6030
2	Armazón – 72 x 30'	1	H-10196FRAME	TBAA7230
2	Armazón – 96 x 30'	1	H-10197FRAME	TBAA9630
3	Gabinete Modular con Cajones – 5 Cajones	1	H-8421	TBCH337505

PARTES VENDIDAS EN KIT (NO SE MUESTRA)

KIT DE TORNILLERÍA DE REPUESTO				
#	DESCRIPCIÓN	CANT. EN KIT	NO. DE KIT ULINE	NO. DE KIT DEL FABRICANTE
—	Perno Allen – M6 x 20 mm	17	H-10198	TBAA7230.LJ
	Tornillo Autorroscante de Cabeza Hexagonal – ST6.3 x 25 mm	12		
	Pata Niveladora	2		
	Llave Allen	1		

ULINE H-10195, H-10196
H-10197

ÉTABLI À 1 CAISSON

1 800 295-5510
uline.ca

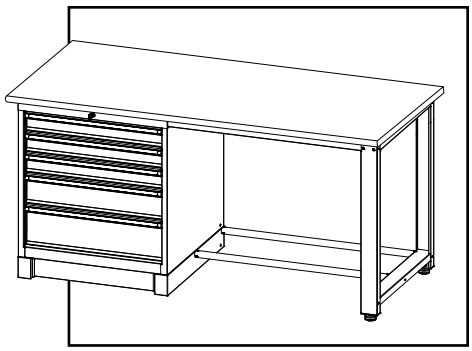

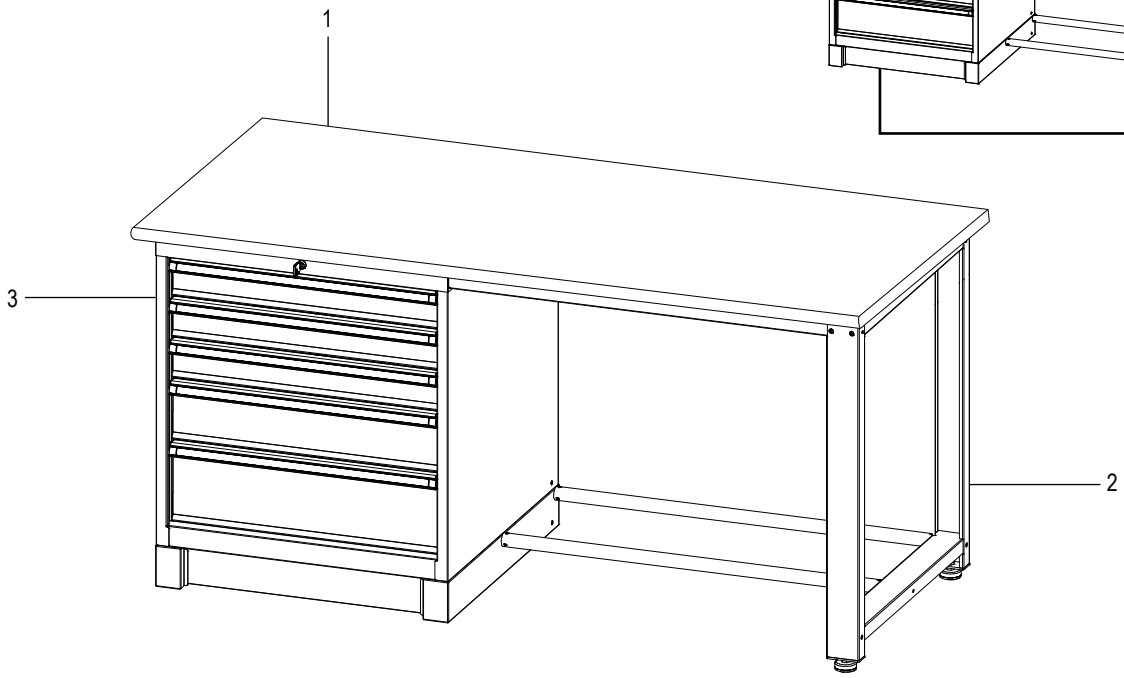

PIÈCES INDIVIDUELLES

#	DESCRIPTION	QTÉ	RÉF. ULINE	RÉF. DU FABRICANT
1	Dessus de table – 60 x 30 po, stratifié	1	H-1135-LTOP	----------
1	Dessus de table – 60 x 30 po, érable, bord arrondi	1	H-1135-MTOP	----------
1	Dessus de table – 60 x 30 po, acier inoxydable	1	H-1135-SSTOP	H-1135-SSTOP
1	Dessus de table – 72 x 30 po, stratifié	1	H-1137-LTOP	----------
1	Dessus de table – 72 x 30 po, érable, bord arrondi	1	H-1137-MTOP	----------
1	Dessus de table – 72 x 30 po, acier inoxydable	1	H-1137-SSTOP	----------
1	Dessus de table – 96 x 30 po, stratifié	1	H-2484-LTOP	PLT3096
1	Dessus de table – 96 x 30 po, érable, bord arrondi	1	H-2484-MTOP	----------
1	Dessus de table – 96 x 30 po, acier inoxydable	1	H-2484-SSTOP	H-2484-SSTOP
2	Cadre – 60 x 30 po	1	H-10195FRAME	TBAA6030
2	Cadre – 72 x 30 po	1	H-10196FRAME	TBAA7230
2	Cadre – 96 x 30 po	1	H-10197FRAME	TBAA9630
3	Armoire modulaire à tiroirs – 5 tiroirs	1	H-8421	TBCH337505

PIÈCES VENDUES EN ENSEMBLE (NON ILLUSTRÉ)

ENSEMBLE DE MATÉRIEL DE RECHANGE				
#	DESCRIPTION	QTÉ/ENS.	RÉF. ULINE POUR L'ENSEMBLE	RÉF. DU FABRICANT POUR L'ENSEMBLE
—	Boulon Allen – M6 x 20 mm	17	H-10198	TBAA7230.LJ
	Vis taraudeuse à tête creuse hexagonale – ST6.3 x 25 mm	12		
	Patte de nivellement	2		
	Clé Allen	1		