Para Español, vea páginas 5-8.
Pour le français, consulter les pages 9-12.

ULINE H-1275
ORGAPACK 5/8" COMBO TOOL

1-800-295-5510
uline.com

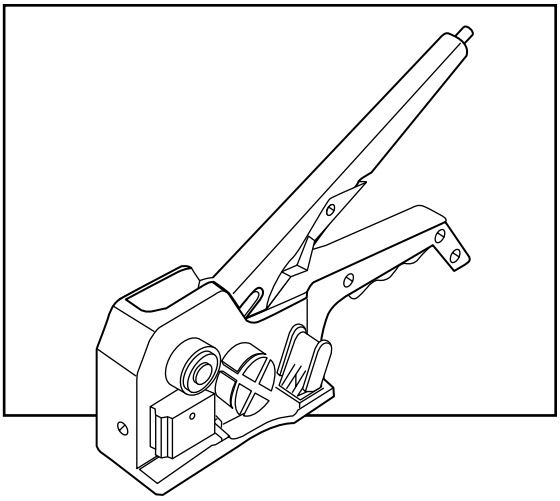

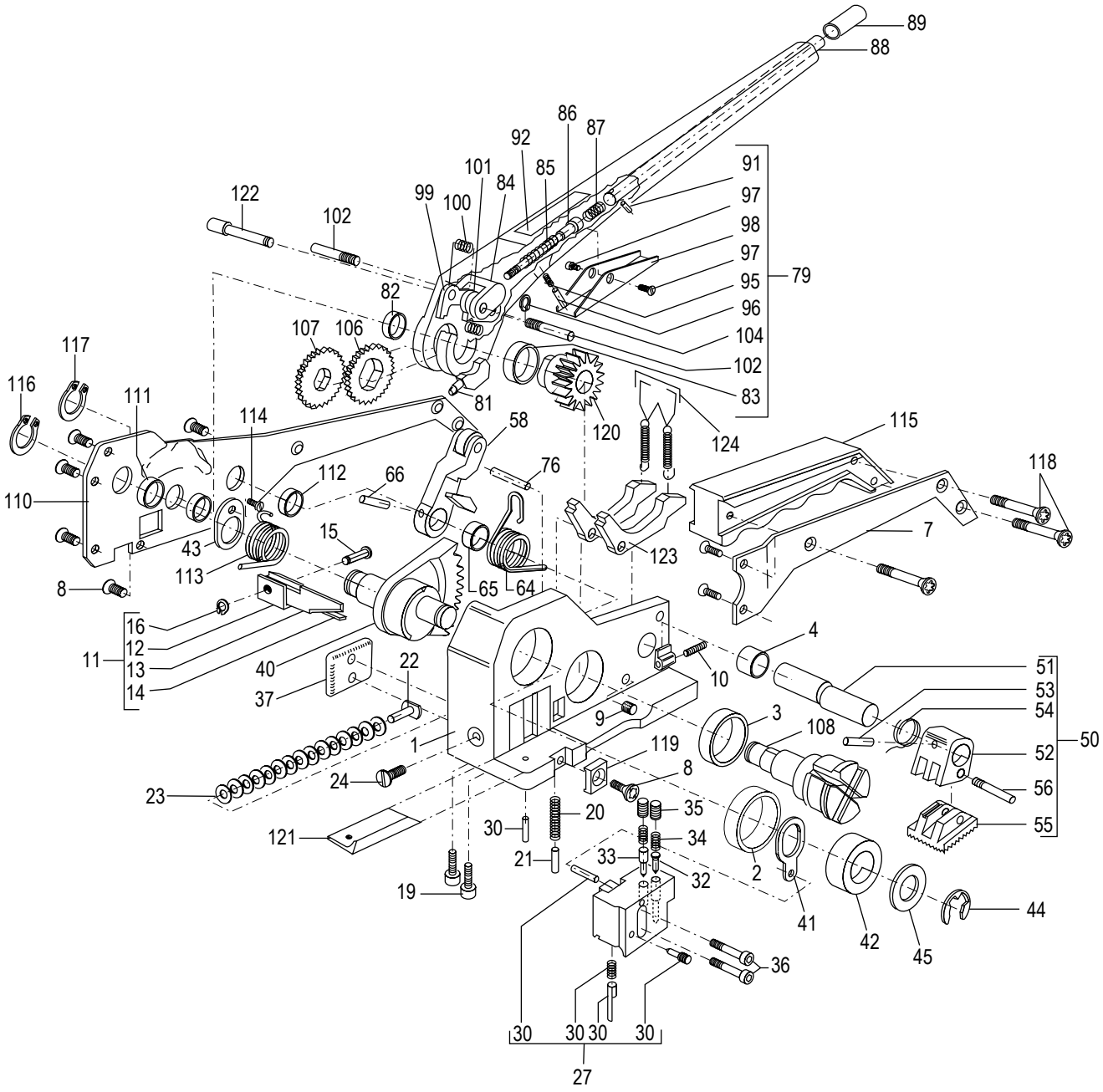

#	DESCRIPTION	QTY.	ULINE PART NO.	MFG. PART NO.
1	Housing	1	----------	2973.100.010
2	Bearing	1	H-1275-002	2973.100.011
3	Bearing	1	H-1275-003Q	2973.100.012
4	Bearing	1	----------	1935.512.150
7	Handle Plate	1	----------	2973.100.015
8	Oval Head Screw	8	H-1275-008	1821.027.016
9	Set Screw	1	----------	1910.006.108
10	Set Screw	1	----------	1910.405.102
11	Knife Assembly (Includes #12-16)	1	H-1275-11	2973.100.204
12	Bow	1	----------	2973.100.016
13	Knife	1	----------	2973.100.017
14	Counter Knife	1	----------	2973.100.018
15	Shaft	1	----------	2973.100.019
16	Retaining Ring	1	----------	1920.205.062
19	Cylinder Screw	2	----------	1910.804.088
20	Compression Spring	1	----------	2973.100.020
21	Cylindrical Pin	1	----------	1921.304.181
22	Stop Pin	1	----------	2973.100.021
23	Saucer Spring	15	H-771-24	2970.000.010
24	Countersunk Screw	1	H-771-CSCREW	1911.704.089
27	Punch Assembly (Includes #29-35)	1	H-1275-27	2973.100.205
29	Screw	1	H-771-030	2973.100.139
30	Cylindrical Pin	1	H-1275-030	1921.303.121
31	Seal Stop – Front	1	----------	2973.100.023
32	Seal Stop – Back	1	H-1275-32Q	2973.100.024
33	Seal Retainer	1	----------	2973.100.025
34	Spring	2	----------	2973.100.026
35	Set Screw	2	H-771-STSCRW	1910.405.052
36	Cylinder Screw	2	H-1275-222	1911.006.022
37	Punch Holding Plate	1	H-1275-2973Q	2973.100.027
40	Eccentric Segment Wheel	1	H-1275-ECCDS	2973.100.186
41	Backup Plate	1	H-1275-028	2973.100.028
42	Pressure Roller	1	H-1275-187	2973.100.187

#	DESCRIPTION	QTY.	ULINE PART NO.	MFG. PART NO.
43	Washer – Back	1	----------	2973.100.185
44	Lock Washer	1	H-1275-044	1920.112.132
45	Washer – Front	1	H-1275-193	2973.100.193
50	Clamp Pawl Assembly (Incl Pts 51-56)	1	H-1275-50	2973.100.206
51	Eccentric Shaft		----------	2973.100.029
52	Clamp Arm	1	----------	2973.100.031
53	Roll Pin	1	H-1275-53	1921.604.161
54	Resetting Spring	1	----------	2973.100.030
55	Clamp Plate	1	H-771-1821	1821.046.006
56	Bolt Screw	1	----------	2973.100.033
58	Rocker Assembly	1	----------	2973.100.210
64	Spring	1	H-1275-64	1821.012.010
65	Spring Bushing	1	----------	2973.100.035
66	Roll Pin		----------	1921.604.201
76	Cylindrical Pin	1	----------	1921.305.281
79	Lever Assembly, Orga Blue (Includes #81-104 and #122)	1	H-1275-LEVER	2973.100.282
81	Activating Pin	1	----------	2973.100.045
82	Bushing – Back	1	----------	2973.100.046
83	Bushing – Front	1	----------	2973.100.047
84	Bow	1	----------	2973.100.188
85	Spring – Front	1	----------	2973.100.048
86	Thrust Rod	1	H-771-081	2973.100.049
87	Spring	1	H-771-082	2973.100.050
88	Pushbutton Assembly (Includes #89)	1	H-1275-221	2973.100.221
89	Pushbutton	1	----------	2973.100.144
91	Lock Pin	1	H-771-084	2973.100.052
92	Warning Plate	1	----------	1820.090.202
95	Spring	1	H-771-053SPG	2973.100.053
96	Cylindrical Pin	1	----------	1921.304.121
97	Cylinder Screw	2	H-771-87	1910.804.040
98	Lock Plate	1	----------	2973.100.253
99	Ratchet (Windlass)	1	H-1275-99	2973.100.056
100	Spring	2	H-771-057	2973.100.057

#	DESCRIPTION	QTY.	ULINE PART NO.	MFG. PART NO.
101	Ratchet (Punch)	1	H-1275-101	2973.100.058
102	Bolt Screw	2	H-1275-102	2973.100.059
104	Retaining Ring	1	H-771-RTRING	1920.204.042
106	Ratchet Wheel (Punch)	1	H-1275-106	2973.100.060
107	Ratchet Wheel (Windlass)	1	H-1275-107	2973.100.061
108	Windlass	1	----------	2973.100.191
110	Rear Plate Assembly (Includes #111, #112)	1	----------	2973.100.062
111	Bearing	1	----------	2973.100.063
112	Bearing	2	H-771-BEAR2	2973.100.134
113	Eccentric Spring	1	H-1275-113	2973.100.192
114	Head Screw	1	----------	1912.504.068
115	Handle	1	H-1275-115	2973.100.064
116	Retaining Ring	1	H-1275-R116Q	1920.214.102
117	Retaining Ring	1	H-771-EXRRNG	1920.212.102
118	Oval Head Screw	3	----------	1821.027.018
119	Support	1	H-1275-065	2973.100.065
120	Gear	1	H-1275-120Q	2973.100.232
121	OR400.16 – Seal Guide & Seal (Opr2300.16)	1	H-1275-SEALG	2973.100.066
122	Shoulder Bolt	1	----------	2973.100.256
123	Pawl	2	H-1275-123	2973.100.255
124	Tension Springs And Bow	2	H-771-SPRNG	2973.100.288

ULINE H-1275

ORGAPACK HERRAMIENTA COMBINADA DE 5/8"

800-295-5510
uline.mx

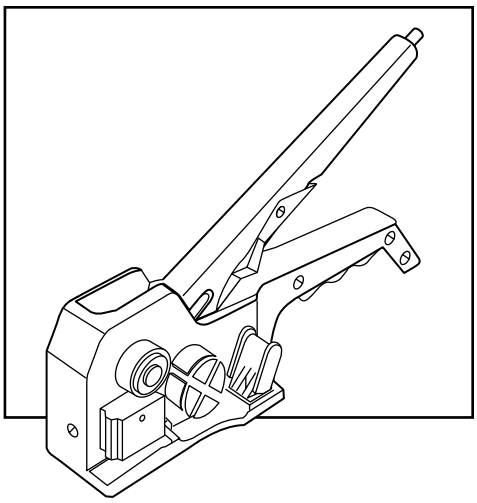

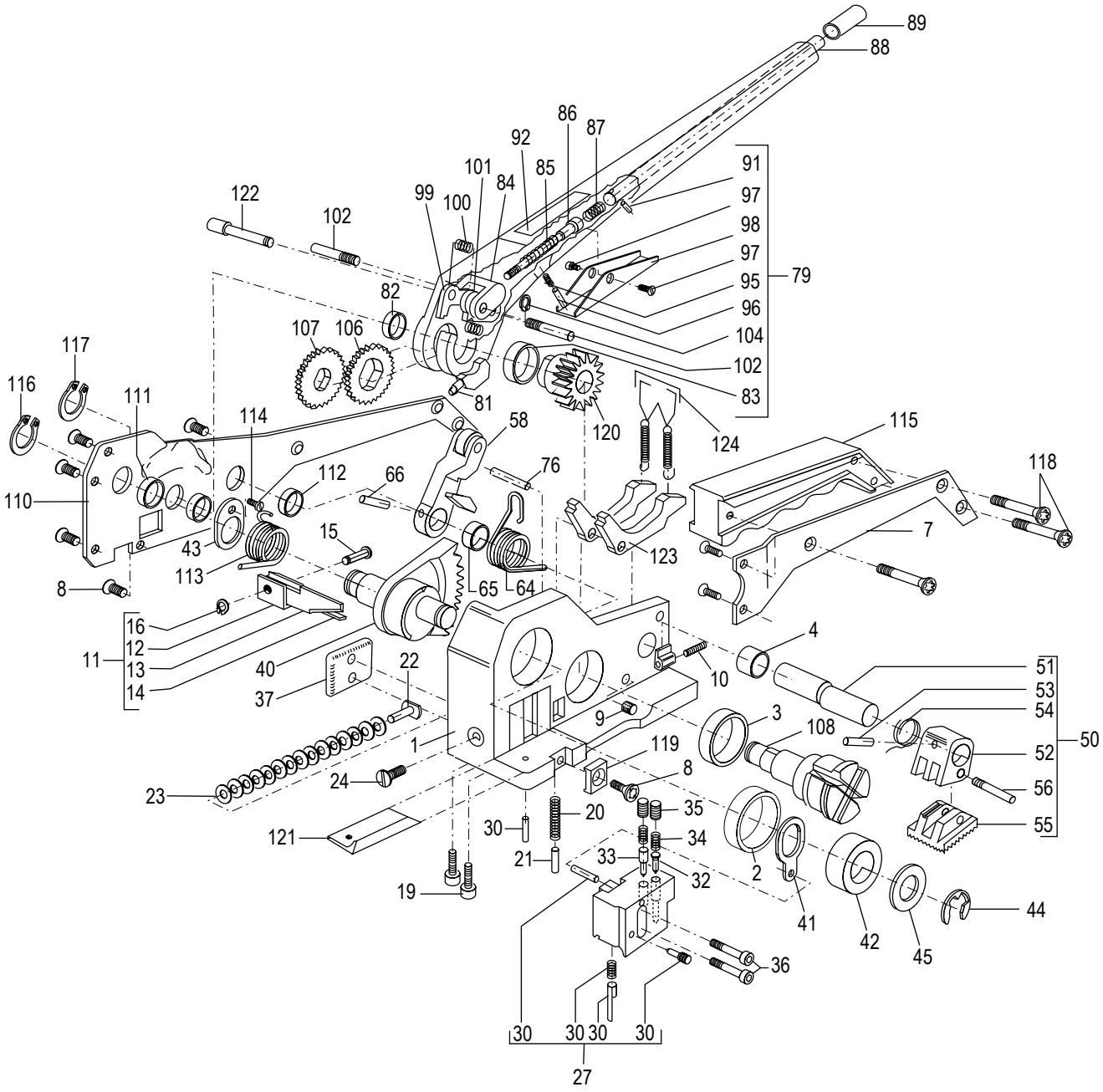

#	DESCRIPCIÓN	CANT.	NO. DE PARTE DE ULINE	NO. DE PARTE DEL FABRICANTE
1	Carcasa	1	----------	2973.100.010
2	Cojinete	1	H-1275-002	2973.100.011
3	Cojinete	1	H-1275-003Q	2973.100.012
4	Cojinete	1	----------	1935.512.150
7	Placa del Asa	1	----------	2973.100.015
8	Tornillo de Cabeza Ovalada	8	H-1275-008	1821.027.016
9	Tornillo de Ajuste	1	----------	1910.006.108
10	Tornillo de Ajuste	1	----------	1910.405.102
11	Ensamble de la Cuchilla (Incluye #12-16)	1	H-1275-11	2973.100.204
12	Arco	1	----------	2973.100.016
13	Cuchilla	1	----------	2973.100.017
14	Contra-Cuchilla	1	----------	2973.100.018
15	Eje	1	----------	2973.100.019
16	Anillo Retenedor	1	----------	1920.205.062
19	Tornillo Cilíndrico	2	----------	1910.804.088
20	Resorte de Compresión	1	----------	2973.100.020
21	Perno Cilíndrico	1	----------	1921.304.181
22	Perno Tope	1	----------	2973.100.021
23	Resorte tipo Platillo	15	H-771-24	2970.000.010
24	Tornillo Avellanado	1	H-771-CSCREW	1911.704.089
27	Ensamble de la Perforadora (Incluye #29-35)	1	H-1275-27	2973.100.205
29	Tornillo	1	H-771-030	2973.100.139
30	Clavija Cilíndrica	1	H-1275-030	1921.303.121
31	Tope del Sello – Frontal	1	----------	2973.100.023
32	Tope del Sello – Trasero	1	H-1275-32Q	2973.100.024
33	Retenedor de Sello	1	----------	2973.100.025
34	Resorte	2	----------	2973.100.026
35	Tornillo de Ajuste	2	H-771-STSCRW	1910.405.052
36	Tornillo Cilíndrico	2	H-1275-222	1911.006.022
37	Placa de Soporte de Perforación	1	H-1275-2973Q	2973.100.027
40	Rueda de Segmento Excéntrica	1	H-1275-ECCDS	2973.100.186
41	Placa de Respaldo	1	H-1275-028	2973.100.028
42	Rodillo de Presión	1	H-1275-187	2973.100.187

#	DESCRIPCIÓN	CANT.	NO. DE PARTE DE ULINE	NO. DE PARTE DEL FABRICANTE
43	Rondana – Trasera	1	----------	2973.100.185
44	Rondana de Seguridad	1	H-1275-044	1920.112.132
45	Rondana – Frontal	1	H-1275-193	2973.100.193
50	Ensamble del Seguro de la Abrazadera (Incl. Partes 51-56)	1	H-1275-50	2973.100.206
51	Eje Excéntrico		----------	2973.100.029
52	Abrazadera del Seguro	1	----------	2973.100.031
53	Perno del Rodillo	1	H-1275-53	1921.604.161
54	Resorte de Reconfiguración	1	----------	2973.100.030
55	Placa de Abrazadera	1	H-771-1821	1821.046.006
56	Tornillo con Rosca	1	----------	2973.100.033
58	Ensamble del Balancín	1	----------	2973.100.210
64	Resorte	1	H-1275-64	1821.012.010
65	Casquillo de Resorte	1	----------	2973.100.035
66	Perno del Rodillo		----------	1921.604.201
76	Perno Cilíndrico	1	----------	1921.305.281
79	Ensamble de la Palanca, Orga Azul (Incluye #81-104 y #122)	1	H-1275-LEVER	2973.100.282
81	Perno de Activación	1	----------	2973.100.045
82	Casquillo – Trasero	1	----------	2973.100.046
83	Casquillo – Frontal	1	----------	2973.100.047
84	Arco	1	----------	2973.100.188
85	Resorte – Frontal	1	----------	2973.100.048
86	Varilla de Empuje	1	H-771-081	2973.100.049
87	Resorte	1	H-771-082	2973.100.050
88	Ensamble del Botón Pulsador (Incluye #89)	1	H-1275-221	2973.100.221
89	Botón Pulsador	1	----------	2973.100.144
91	Perno de Seguridad	1	H-771-084	2973.100.052
92	Placa de Advertencia	1	----------	1820.090.202
95	Resorte	1	H-771-053SPG	2973.100.053
96	Perno Cilíndrico	1	----------	1921.304.121
97	Tornillo Cilíndrico	2	H-771-87	1910.804.040
98	Placa de Bloqueo	1	----------	2973.100.253
99	Trinquete (Molinete)	1	H-1275-99	2973.100.056
100	Resorte	2	H-771-057	2973.100.057

#	DESCRIPCIÓN	CANT.	NO. DE PARTE DE ULINE	NO. DE PARTE DEL FABRICANTE
101	Trinquete (Perforadora)	1	H-1275-101	2973.100.058
102	Tornillo con Rosca	2	H-1275-102	2973.100.059
104	Anillo Retenedor	1	H-771-RTRING	1920.204.042
106	Rueda del Trinquete (Perforadora)	1	H-1275-106	2973.100.060
107	Rueda del Trinquete (Molinete)	1	H-1275-107	2973.100.061
108	Molinete	1	----------	2973.100.191
110	Ensamble de la Placa Trasera (Incluye #111, #112)	1	----------	2973.100.062
111	Cojinete	1	----------	2973.100.063
112	Cojinete	2	H-771-BEAR2	2973.100.134
113	Resorte Excéntrico	1	H-1275-113	2973.100.192
114	Tornillo con Cabeza	1	----------	1912.504.068
115	Asa	1	H-1275-115	2973.100.064
116	Anillo Retenedor	1	H-1275-R116Q	1920.214.102
117	Anillo Retenedor	1	H-771-EXRRNG	1920.212.102
118	Tornillo de Cabeza Ovalada	3	----------	1821.027.018
119	Soporte	1	H-1275-065	2973.100.065
120	Mecanismo	1	H-1275-120Q	2973.100.232
121	OR400.16 – Guía del Sello y Sello (Opr2300.16)	1	H-1275-SEALG	2973.100.066
122	Perno de Bloqueo	1	----------	2973.100.256
123	Seguro	2	H-1275-123	2973.100.255
124	Arco y Resortes de Tensión	2	H-771-SPRNG	2973.100.288

ULINE H-1275

ORGAPACK – OUTIL COMBINÉ 5/8 PO

1 800 295-5510
uline.ca

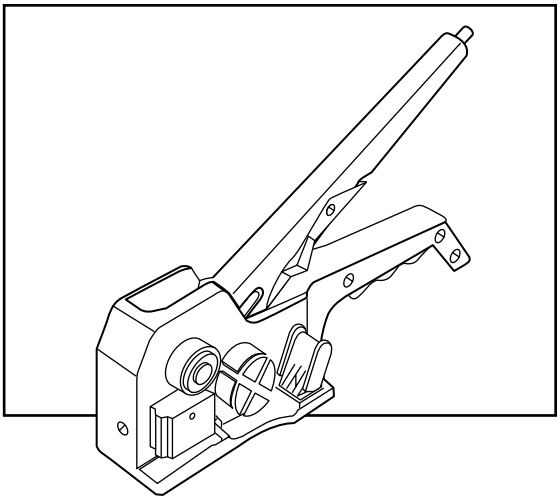

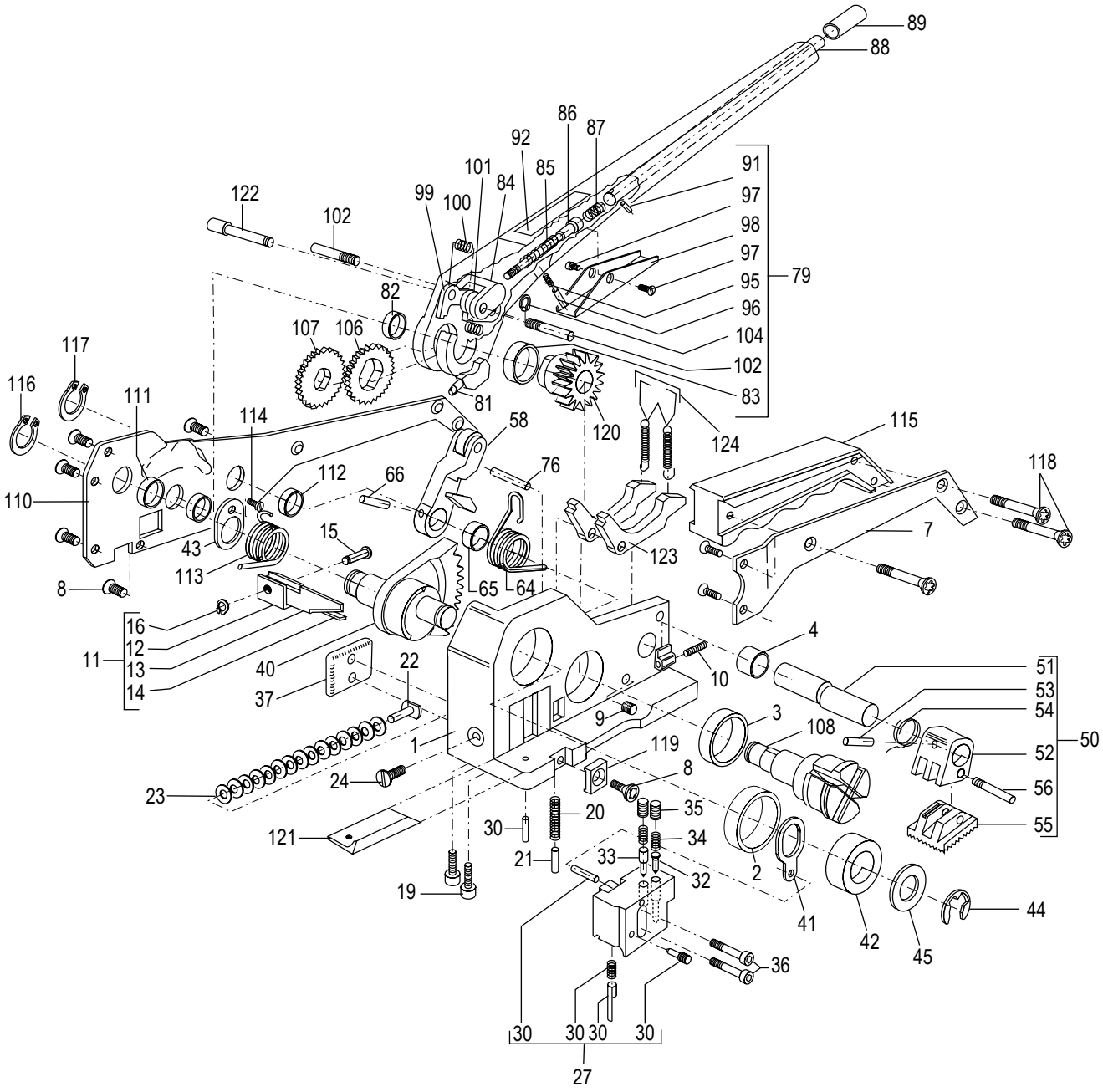

#	DESCRIPTION	QTÉ	RÉF. ULINE	RÉF DU FABRICANT
1	Boîtier	1	----------	2973.100.010
2	Roulement	1	H-1275-002	2973.100.011
3	Roulement	1	H-1275-003Q	2973.100.012
4	Roulement	1	----------	1935.512.150
7	Plaque poignée	1	----------	2973.100.015
8	Vis à tête ovale	8	H-1275-008	1821.027.016
9	Vis de réglage	1	----------	1910.006.108
10	Vis de réglage	1	----------	1910.405.102
11	Ensemble de couteaux (n° 12 à 16 compris)	1	H-1275-11	2973.100.204
12	Boucle	1	----------	2973.100.016
13	Couteau	1	----------	2973.100.017
14	Couteau de comptoir	1	----------	2973.100.018
15	Arbre	1	----------	2973.100.019
16	Bague de retenue	1	----------	1920.205.062
19	Vis cylindrique	2	----------	1910.804.088
20	Ressort de compression	1	----------	2973.100.020
21	Axe cylindrique	1	----------	1921.304.181
22	Goupille d'arrêt	1	----------	2973.100.021
23	Ressort Saucer	15	H-771-24	2970.000.010
24	Vis à tête fraisée	1	H-771-CSCREW	1911.704.089
27	Ensemble de poinçons (n° 29 à 35 compris)	1	H-1275-27	2973.100.205
29	Vis	1	H-771-030	2973.100.139
30	Axe cylindrique	1	H-1275-030	1921.303.121
31	Arrêt de joint – Avant	1	----------	2973.100.023
32	Arrêt de joint – Arrière	1	H-1275-32Q	2973.100.024
33	Retenue de joint	1	----------	2973.100.025
34	Ressort	2	----------	2973.100.026
35	Vis de réglage	2	H-771-STSCRW	1910.405.052
36	Vis cylindrique	2	H-1275-222	1911.006.022
37	Plaque de retenue de poinçon	1	H-1275-2973Q	2973.100.027
40	Roue segment excentrique	1	H-1275-ECCDS	2973.100.186
41	Plaque d'appui	1	H-1275-028	2973.100.028
42	Rouleau de pression	1	H-1275-187	2973.100.187

#	DESCRIPTION	QTÉ	RÉF. ULINE	RÉF DU FABRICANT
43	Rondelle – Arrière	1	----------	2973.100.185
44	Rondelle d'arrêt	1	H-1275-044	1920.112.132
45	Rondelle – Avant	1	H-1275-193	2973.100.193
50	Ensemble de pinces à cliquet (comprend les pièces 51 à 56)	1	H-1275-50	2973.100.206
51	Arbre excentrique		----------	2973.100.029
52	Bras de pince	1	----------	2973.100.031
53	Goupille cylindrique	1	H-1275-53	1921.604.161
54	Ressort de remise à zéro	1	----------	2973.100.030
55	Plaque à pince	1	H-771-1821	1821.046.006
56	Vis boulon	1	----------	2973.100.033
58	Ensemble de bascule	1	----------	2973.100.210
64	Ressort	1	H-1275-64	1821.012.010
65	Coussinet à ressort	1	----------	2973.100.035
66	Goupille cylindrique		----------	1921.604.201
76	Axe cylindrique	1	----------	1921.305.281
79	Ensemble de leviers, Bleu Orga (n° 81 à 104 et n° 122)	1	H-1275-LEVER	2973.100.282
81	Goupille d'activation	1	----------	2973.100.045
82	Coussinet – Arrière	1	----------	2973.100.046
83	Coussinet – Avant	1	----------	2973.100.047
84	Boucle	1	----------	2973.100.188
85	Ressort – Avant	1	----------	2973.100.048
86	Tige de poussée	1	H-771-081	2973.100.049
87	Ressort	1	H-771-082	2973.100.050
88	Ensemble bouton-poussoir (n° 89 inclus)	1	H-1275-221	2973.100.221
89	Bouton-poussoir	1	----------	2973.100.144
91	Goupille de verrouillage	1	H-771-084	2973.100.052
92	Plaque d'avertissement	1	----------	1820.090.202
95	Ressort	1	H-771-053SPG	2973.100.053
96	Axe cylindrique	1	----------	1921.304.121
97	Vis cylindrique	2	H-771-87	1910.804.040
98	Plaque de verrouillage	1	----------	2973.100.253
99	Clé à rochet (bourriquet)	1	H-1275-99	2973.100.056
100	Ressort	2	H-771-057	2973.100.057

#	DESCRIPTION	QTÉ	RÉF. ULINE	RÉF DU FABRICANT
101	Clé à poinçonner	1	H-1275-101	2973.100.058
102	Vis boulon	2	H-1275-102	2973.100.059
104	Bague de retenue	1	H-771-RTRING	1920.204.042
106	Roue à rochet (poinçon)	1	H-1275-106	2973.100.060
107	Roue à rochet (Bourriquet)	1	H-1275-107	2973.100.061
108	Bourriquet	1	----------	2973.100.191
110	Ensemble de plaques arrière (n° 111, 112 compris)	1	----------	2973.100.062
111	Roulement	1	----------	2973.100.063
112	Roulement	2	H-771-BEAR2	2973.100.134
113	Ressort excentrique	1	H-1275-113	2973.100.192
114	Vis de tête	1	----------	1912.504.068
115	Poignée	1	H-1275-115	2973.100.064
116	Bague de retenue	1	H-1275-R116Q	1920.214.102
117	Bague de retenue	1	H-771-EXRRNG	1920.212.102
118	Vis à tête ovale	3	----------	1821.027.018
119	Support	1	H-1275-065	2973.100.065
120	Engrenage	1	H-1275-120Q	2973.100.232
121	OR400.16 – Guide de joint d'étanchéité et joint d'étanchéité (Opr2300.16)	1	H-1275-SEALG	2973.100.066
122	Boulon d'épaulement	1	----------	2973.100.256
123	Cliquet	2	H-1275-123	2973.100.255
124	Ressorts de tension et boucle	2	H-771-SPRNG	2973.100.288