Para Español, vea páginas 4-6.
Pour le français, consulter les pages 7-9.

ULINE H-1486, H-1487

MANUAL LIFT TABLE – 32 x 20"

1-800-295-5510
uline.com



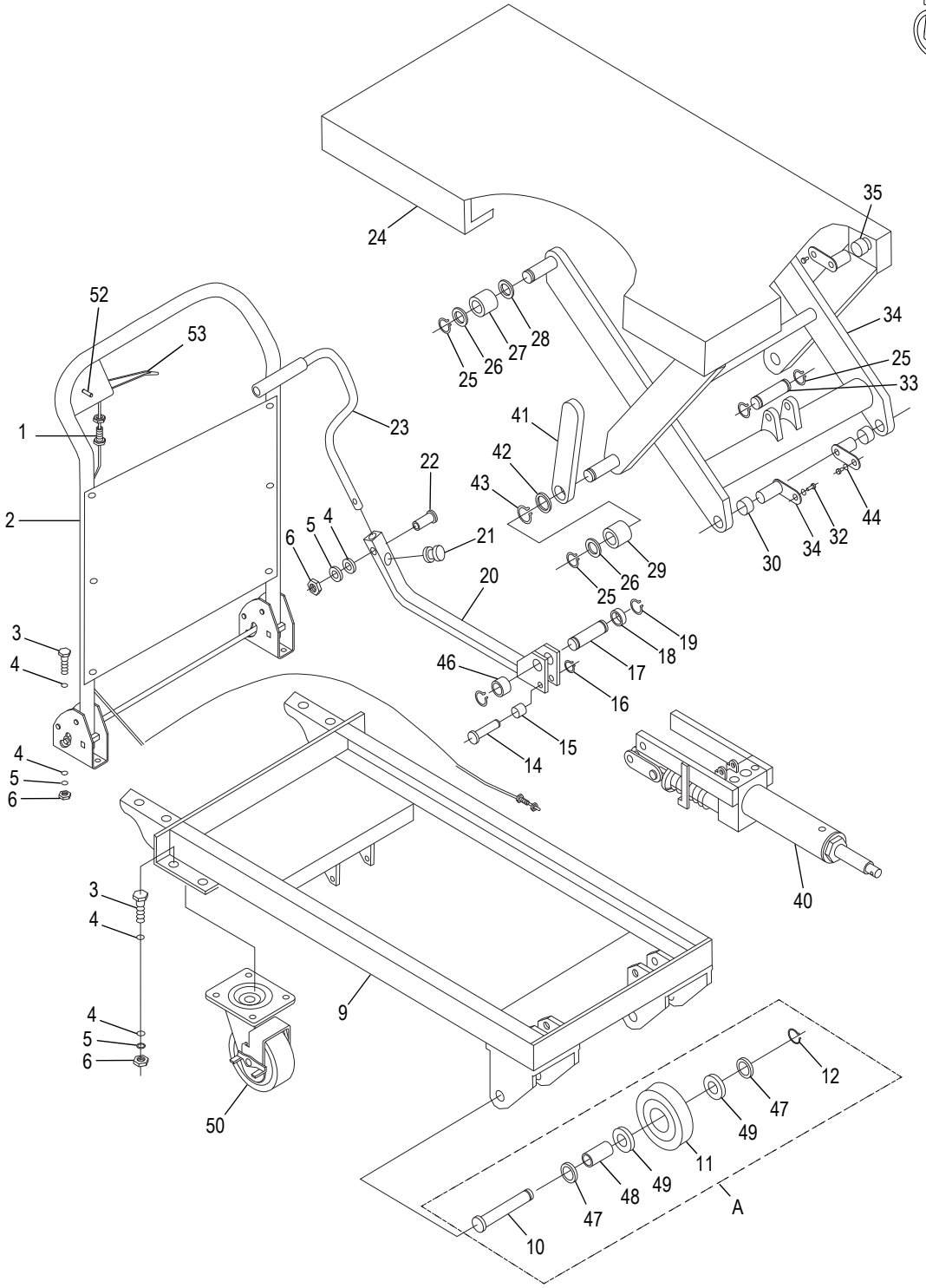

INDIVIDUAL PARTS

#	DESCRIPTION	QTY.	ULINE PART NO.	MFG. PART NO.
1	Pull Rod	1	H-1486-2	SP300-HANDLE-PT#6
2	Handle Bar Assembly	1	H-1487-HBAR	SP500-HANDLE-PT#2
3	Bolt – M8 x 25 mm	12	----------	SP300-PT#3
4	Washer 8	25	H-1783-WASHR	SP500-PT#4
5	Washer 8	13	H-1487-WSH1Q	SP500-PT#5
6	Nut – M8	13	H-1486-NUTQ	SP300-PT#6
9	Frame	1	----------	SP300-PT#9
14	Shaft	1	H-6754-18Q	SPT500ASSY-P18
15	Bushing	1	H-6754-19Q	SPT500ASSY-P19
16	Retaining Ring for Axle 10	1	H-1783-33	SP800-PT#33
17	Shaft	1	H-1486-23	SP300-PT#17
18	Retaining Ring	1	H-1784-YQ7Q	SPS350-PT#21
19	Retaining Ring for Axle 20	2	H-1486-24	SP300-PT#19
20	Connecting Rod	1	H-1487-20Q	SP500-PT#20
21	Cushion	1	H-1486-21Q	SP300-PT#21
22	Bolt – M8 x 30 mm	1	H-1487-M830Q	SP500-PT#22
23	Pedal Bar	1	H-1486-4759	SP300-PT#23
24	Table	1	H-1486-TOPQ	SP300-PT#24
25	Retaining Ring for Axle 16	6	----------	SP300-PT#25
26	Washer 16	4	----------	SP300-PT#26
27	Washer	2	----------	SP300-PT#27
28	Washer	2	----------	SP300-PT#28
29	Roller	2	H-1487-29Q	SP500-PT#29
30	Bushing	2	H-1486-30Q	SP300-PT#30
31	L-Pin	4	H-1486-31	SP300-PT#31
32	Bolt – M6 x 10 mm	4	----------	SP300-PT#32
33	Shaft	1	H-6754-40Q	SPT500ASSY-P40
34	Arm	1	----------	SP300-PT#34
35	Bushing	2	----------	SP300-PT#35
40	Pump (For H-1486)	1	H-1486-29	SP300-PT#40
40	Pump (For H-1487)	1	H-1487-PUMP	SP500-PT#40
41	Support	2	----------	SP300-PT#41
42	Washer	2	----------	SP300-PT#42
43	Retaining Ring for Axle 24	2	----------	SP300-PT#43
44	Washer 6	4	----------	SP300-PT#44
46	Retaining Ring	1	H-1487-46Q	SP500-PT#46
50	Swivel Wheel Complete	2	H-1486-SWVL	SP300-PT#8
52	Spring Pin	1	H-1486-66	SP300-HANDLE-PT#1
53	Handle	1	H-1486-65	SP300-HANDLE-PT#3

PARTS SOLD AS A KIT

POLYURETHANE CASTER KIT							
KIT	#	DESCRIPTION	QTY. IN KIT	ULINE PART NO.	MFG. PART NO.	ULINE KIT NO.	MFG. KIT NO.
A	10	Shaft	1	H-1486-16	SP300-PT#10	H-1486-RIGID	SP300-RIGID
	11	Wheel – 5"	1	H-1486-WH	SP300-PT#11		
	12	Retaining Ring	1	----------	SP300-PT#12		
	47	Bushing	2	----------	SP300-PT#47		
	48	Hollow Shaft	1	----------	SP300-PT#48		
	49	Bearing	2	H-1783-25	SP800-PT#25		

ULINE H-1486, H-1487
MESA DE ELEVACIÓN MANUAL – 32 x 20"

800-295-5510
uline.mx



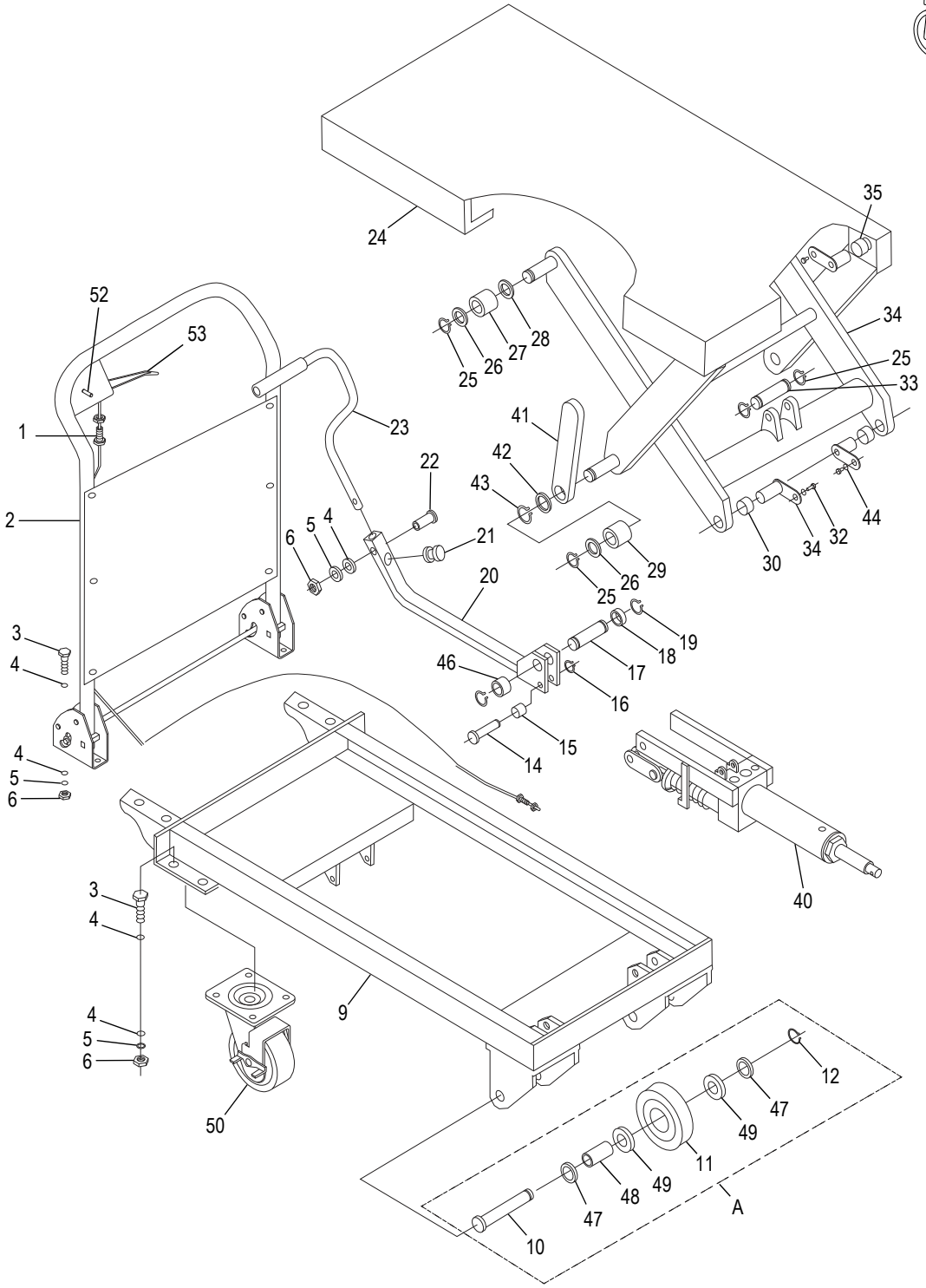

PARTES INDIVIDUALES

#	DESCRIPCIÓN	CANT.	NO. DE PARTE DE ULINE	NO. DE PARTE DEL FABRICANTE
1	Varilla de Apoyo	1	H-1486-2	SP300-HANDLE-PT#6
2	Ensamble de la Barra del Asa	1	H-1487-HBAR	SP500-HANDLE-PT#2
3	Pernos de M8 x 25 mm	12	----------	SP300-PT#3
4	Rondana 8	25	H-1783-WASHR	SP500-PT#4
5	Rondana 8	13	H-1487-WSH1Q	SP500-PT#5
6	Tuerca de M8	13	H-1486-NUTQ	SP300-PT#6
9	Armazón	1	----------	SP300-PT#9
14	Eje	1	H-6754-18Q	SPT500ASSY-P18
15	Casquillo	1	H-6754-19Q	SPT500ASSY-P19
16	Anillo de Retención para Eje 10	1	H-1783-33	SP800-PT#33
17	Eje	1	H-1486-23	SP300-PT#17
18	Anillo de Retención	1	H-1784-YQ7Q	SPS350-PT#21
19	Anillo de Retención para Eje 20	2	H-1486-24	SP300-PT#19
20	Varilla de Conexión	1	H-1487-20Q	SP500-PT#20
21	Cojín	1	H-1486-21Q	SP300-PT#21
22	Perno de M8 x 30 mm	1	H-1487-M830Q	SP500-PT#22
23	Barra del Pedal	1	H-1486-4759	SP300-PT#23
24	Mesa	1	H-1486-TOPQ	SP300-PT#24
25	Anillo de Retención para Eje 16	6	----------	SP300-PT#25
26	Rondana 16	4	----------	SP300-PT#26
27	Rondana	2	----------	SP300-PT#27
28	Rondana	2	----------	SP300-PT#28
29	Rodillo	2	H-1487-29Q	SP500-PT#29
30	Casquillo	2	H-1486-30Q	SP300-PT#30
31	Perno en L	4	H-1486-31	SP300-PT#31
32	Perno de M6 x 10 mm	4	----------	SP300-PT#32
33	Eje	1	H-6754-40Q	SPT500ASSY-P40
34	Brazo	1	----------	SP300-PT#34
35	Casquillo	2	----------	SP300-PT#35
40	Bomba (Para H-1486)	1	H-1486-29	SP300-PT#40
40	Bomba (Para H-1487)	1	H-1487-PUMP	SP500-PT#40
41	Soporte	2	----------	SP300-PT#41
42	Rondana	2	----------	SP300-PT#42
43	Anillo de Retención para Eje 24	2	----------	SP300-PT#43
44	Rondana 6	4	----------	SP300-PT#44
46	Anillo de Retención	1	H-1487-46Q	SP500-PT#46
50	Llanta Giratoria Completa	2	H-1486-SWVL	SP300-PT#8
52	Pasador con Resorte	1	H-1486-66	SP300-HANDLE-PT#1
53	Asa	1	H-1486-65	SP300-HANDLE-PT#3

PARTES VENDIDAS EN KIT

KIT DE LA RUEDA DE POLIURETANO							
KIT	#	DESCRIPCIÓN	CANT. EN KIT	NO. DE PARTE ULINE	NO. DE PARTE DEL FABRICANTE	NO. DE KIT ULINE	NO. DE KIT DEL FABRICANTE
A	10	Eje	1	H-1486-16	SP300-PT#10	H-1486-RIGID	SP300-RIGID
	11	Rueda de 5"	1	H-1486-WH	SP300-PT#11		
	12	Anillo de Retención	1	----------	SP300-PT#12		
	47	Casquillo	2	----------	SP300-PT#47		
	48	Eje Hueco	1	----------	SP300-PT#48		
	49	Balero	2	H-1783-25	SP800-PT#25		

ULINE H-1486, H-1487
TABLE ÉLÉVATRICE MANUELLE – 32 x 20 po

1 800 295-5510
uline.ca



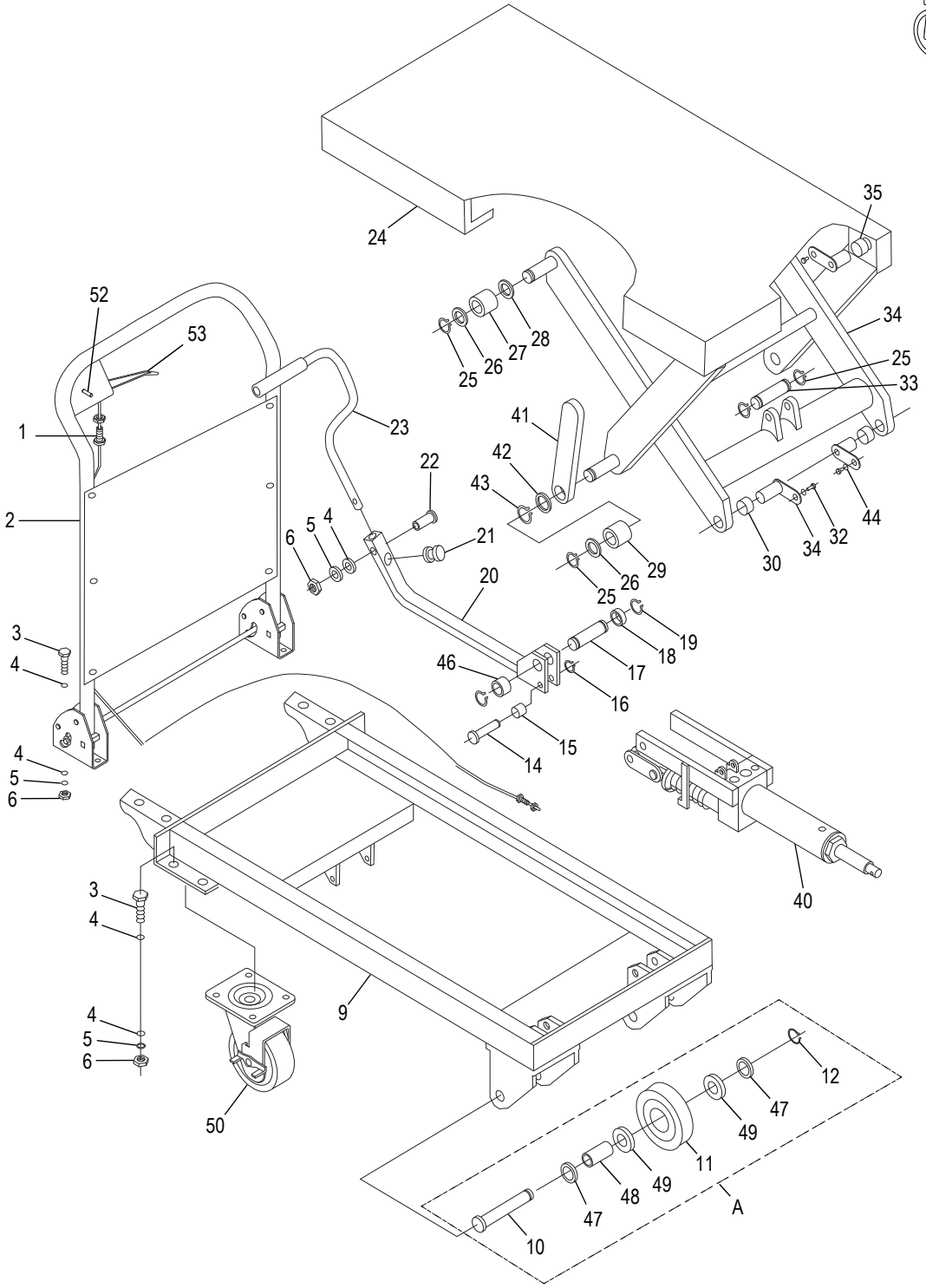

PIÈCES INDIVIDUELLES

#	DESCRIPTION	QTÉ	REF. ULINE	REF. DU FABRICANT
1	Tige de traction	1	H-1486-2	SP300-HANDLE-PT#6
2	Ensemble de la poignée	1	H-1487-HBAR	SP500-HANDLE-PT#2
3	Boulon de M8 x 25 mm	12	----------	SP300-PT#3
4	Rondelle 8	25	H-1783-WASHR	SP500-PT#4
5	Rondelle 8	13	H-1487-WSH1Q	SP500-PT#5
6	Écrou de M8	13	H-1486-NUTQ	SP300-PT#6
9	Structure	1	----------	SP300-PT#9
14	Arbre	1	H-6754-18Q	SPT500ASSY-P18
15	Bague	1	H-6754-19Q	SPT500ASSY-P19
16	Bague de retenue pour essieu 10	1	H-1783-33	SP800-PT#33
17	Arbre	1	H-1486-23	SP300-PT#17
18	Bague de retenue	1	H-1784-YQ7Q	SPS350-PT#21
19	Bague de retenue pour essieu 20	2	H-1486-24	SP300-PT#19
20	Barre de liaison	1	H-1487-20Q	SP500-PT#20
21	Coussin	1	H-1486-21Q	SP300-PT#21
22	Boulon de M8 x 30 mm	1	H-1487-M830Q	SP500-PT#22
23	Barre à pédale	1	H-1486-4759	SP300-PT#23
24	Table	1	H-1486-TOPQ	SP300-PT#24
25	Bague de retenue pour essieu 16	6	----------	SP300-PT#25
26	Rondelle 16	4	----------	SP300-PT#26
27	Rondelle	2	----------	SP300-PT#27
28	Rondelle	2	----------	SP300-PT#28
29	Rouleau	2	H-1487-29Q	SP500-PT#29
30	Bague	2	H-1486-30Q	SP300-PT#30
31	Goupille en L	4	H-1486-31	SP300-PT#31
32	Boulon de M6 x 10	4	----------	SP300-PT#32
33	Arbre	1	H-6754-40Q	SPT500ASSY-P40
34	Bras	1	----------	SP300-PT#34
35	Bague	2	----------	SP300-PT#35
40	Pompe (pour H-1486)	1	H-1486-29	SP300-PT#40
40	Pompe (pour H-1487)	1	H-1487-PUMP	SP500-PT#40
41	Support	2	----------	SP300-PT#41
42	Rondelle	2	----------	SP300-PT#42
43	Bague de retenue pour essieu 24	2	----------	SP300-PT#43
44	Rondelle 6	4	----------	SP300-PT#44
46	Bague de retenue	1	H-1487-46Q	SP500-PT#46
50	Roue pivotante	2	H-1486-SWVL	SP300-PT#8
52	Goupille à ressort	1	H-1486-66	SP300-HANDLE-PT#1
53	Poignée	1	H-1486-65	SP300-HANDLE-PT#3

PIÈCES VENDUES EN ENSEMBLE

ENSEMBLE DE ROULETTE EN POLYURÉTHANE							
ENS.	#	DESCRIPTION	QTÉ/ENS.	RÉF. ULINE	RÉF. DU FABRICANT	RÉF. ULINE POUR L'ENSEMBLE	RÉF. DU FABRICANT POUR L'ENSEMBLE
A	10	Arbre	1	H-1486-16	SP300-PT#10	H-1486-RIGID	SP300-RIGID
	11	Roue de 5 po	1	H-1486-WH	SP300-PT#11		
	12	Bague de retenue	1	----------	SP300-PT#12		
	47	Bague	2	----------	SP300-PT#47		
	48	Arbre creux	1	----------	SP300-PT#48		
	49	Roulement	2	H-1783-25	SP800-PT#25		