Para Español, vea páginas 4-6.
Pour le français, consulter les pages 7-9.

ULINE H-771
ORGAPACK 1/2" COMBO TOOL

1-800-295-5510
uline.com

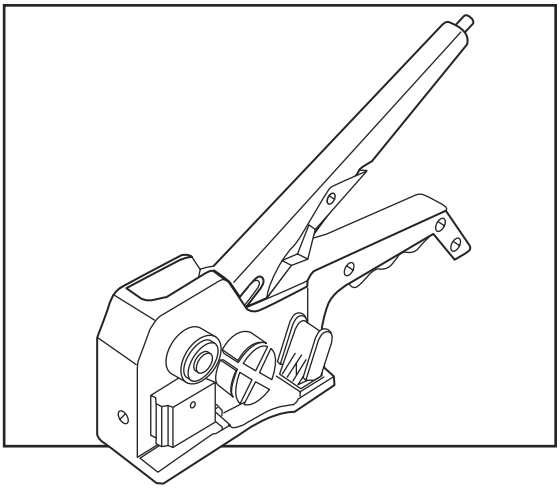

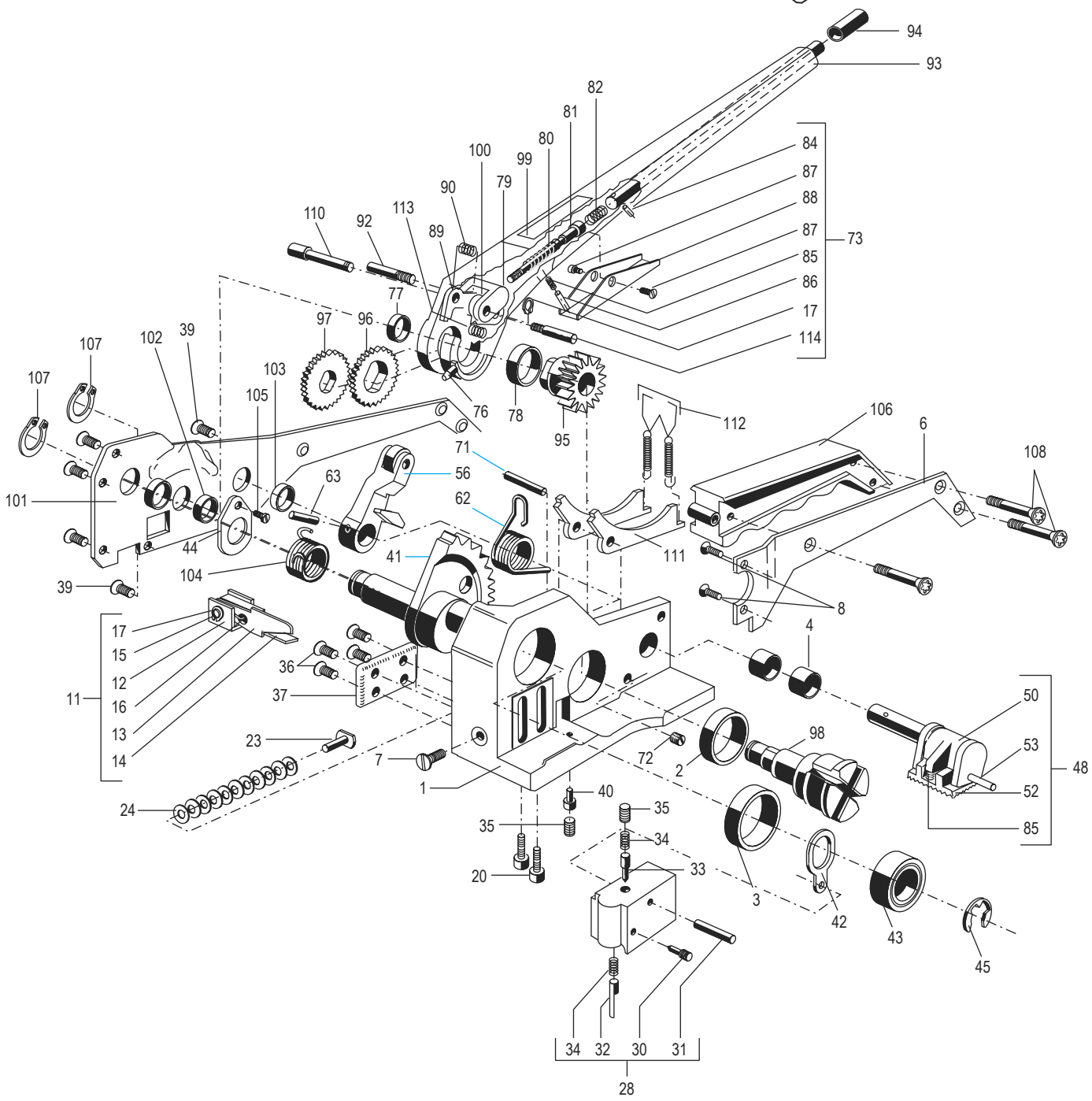

#	DESCRIPTION	QTY.	ULINE PART NO.	MFG. PART NO.
1	Housing Assembly (Incl Pts 1-4)	1	----------	2973.100.093
2	Bearing	1	H-771-BBEAR2	2973.100.094
3	Bearing	1	H-771-BEARNG	2973.100.095
4	Bearing	2	H-771-BEAR	1933.710.100
6	Handle Plate	1	H-771-096Q	2973.100.096
7	Countersunk Screw	1	H-771-CSCREW	1911.704.089
8	Oval Head Screw	2	----------	1821.027.015
11	Knife Assembly (Incl Pts 12-17)	1	H-771-297	2973.100.211
12	Bow	1	----------	2973.100.101
13	Knife	1	H-771-CUTTER	2973.100.102
14	Counter Knife	1	----------	2973.100.103
15	Shaft	1	----------	2973.100.104
16	Spring	1	H-771-SP	2973.100.105
17	Retaining Ring	2	H-771-RTRING	1920.204.042
20	Cylinder Screw	2	H-771-020	1910.803.069
23	Stop Pin	1	H-771-23	2973.100.180
24	Saucer Spring	11	H-771-24	2970.000.010
28	Punch Assembly (Incl Pts 30-35)	1	H-771-CPUNCH	2973.100.214
30	Screw	1	H-771-030	2973.100.139
31	Cylindrical Pin	1	H-1275-030	1921.303.121
32	Seal Stop – Front	1	----------	2973.100.023
33	Seal Retainer	1	----------	2973.100.025
34	Spring	2	----------	2973.100.026
35	Set Screw	2	H-771-STSCRW	1910.405.052
36	Countersunk Screw	4	H-771-036	1821.027.027
37	Punch Holding Plate	1	H-771-037Q	2973.100.107
39	Oval Head Screw	5	H-1275-008	1821.027.016
40	Seal Stop Pin – Rear	1	H-771-SLSTOP	2973.100.108
41	Eccentric Segment Wheel	1	H-771-ECCDS	2973.100.142
42	Backup Plate	1	H-771-PLATE	2973.100.109
43	Pressure Roller	1	H-771-PRESS	2973.100.110
44	Washer – Back	1	H-771-044Q	2973.100.181
45	E-Clip	1	H-771-1920	1920.110.122
48	Clamp Pawl Assembly (Incl Pts 50, 52, 53, 85)	1	H-771-CPAWL	2973.100.222
50	Clamp Arm	1	----------	2973.100.265
52	Clamp Plate	1	H-771-1821	1821.046.006
53	Bolt Screw	1	H-771-BLTSCW	2973.100.033
56	Rocker Assembly	1	----------	2973.100.215
62	Spring	1	H-771-SPG	1821.012.009
63	Roll Pin	1	----------	1921.604.201
71	Cylindrical Pin	1	----------	1921.305.201

#	DESCRIPTION	QTY.	ULINE PART NO.	MFG. PART NO.
72	Set Screw	1	----------	1910.006.108
73	Lever Assembly (Orga Blue) (Incl Pts 17, 84-88, 114)	1	H-771-LEVER	2973.100.268
76	Activating Pin	1	H-771-PIN	2973.100.121
77	Bushing – Back	1	H-771-BSHNGB	2973.100.122
78	Bushing – Front	1	H-771-123	2973.100.123
79	Bow	1	H-771-BSHNGF	2973.100.124
80	Spring – Front	1	H-771-080	2973.100.048
81	Thrust Rod	1	H-771-081	2973.100.049
82	Spring	1	H-771-082	2973.100.050
84	Lock Pin	1	H-771-084	2973.100.052
85	Spring	2	H-771-053SPG	2973.100.053
86	Cylindrical Pin	1	H-771-86	1921.304.121
87	Cylinder Screw	2	H-771-87	1910.804.040
88	Lock Plate	1	----------	2973.100.253
89	Ratchet (Windlass)	1	H-771-#89	2973.100.125
90	Spring	2	H-771-126	2973.100.126
92	Bolt Screw	1	H-771-92	2973.100.128
93	Push Button Shaft	1	H-771-093	2973.100.252
94	Push Button	1	H-771-#94	2973.100.144
95	Gear	1	H-771-GEAR	2973.100.129
96	Ratchet Wheel (Punch)	1	H-771-PUNCH	2973.100.130
97	Ratchet Wheel (Windlass)	1	H-771-WNDLSS	2973.100.131
98	Windlass	1	----------	2973.100.132
99	Warning Plate	1	----------	1820.090.202
100	Ratchet (Pawl)	1	H-771-#100	2973.100.260
101	Rear Plate Assembly (Incl Pts 102, 103)	1	H-771-101	2973.100.133
102	Bearing	1	H-771-BEAR2	2973.100.134
103	Bearing	1	H-771-BBEAR	2973.100.135
104	Eccentric Spring	1	H-771-#104	2973.100.136
105	Head Screw	1	H-771-105Q	1912.504.068
106	Handle	1	H-771-106	2973.100.138
107	Retaining Ring	2	H-771-EXRRNG	1920.212.102
108	Oval Head Screw	3	H-771-108	1821.027.017
110	Shoulder Bolt	1	H-771-SHLDR	2973.100.262
111	Pawl	2	H-771-PAWL	2973.100.258
112	Tension Springs and Bow	1	H-771-SPRNG	2973.100.288
113	Spring	1	H-771-057	2973.100.057
114	Threaded Bolt	1	H-771-BOLT	2973.100.261

ULINE H-771

ORGAPACK HERRAMIENTA COMBINADA DE 1/2"

800-295-5510
uline.mx

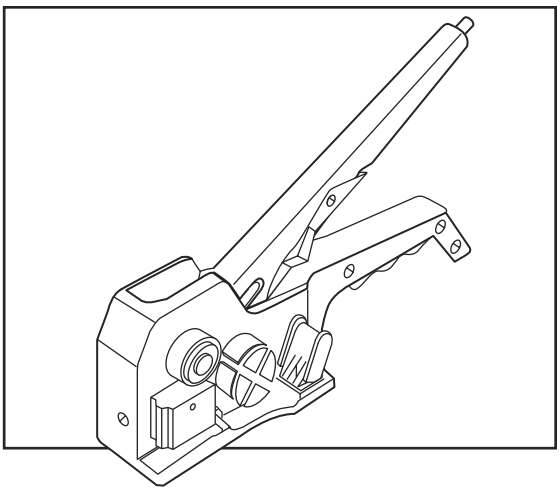

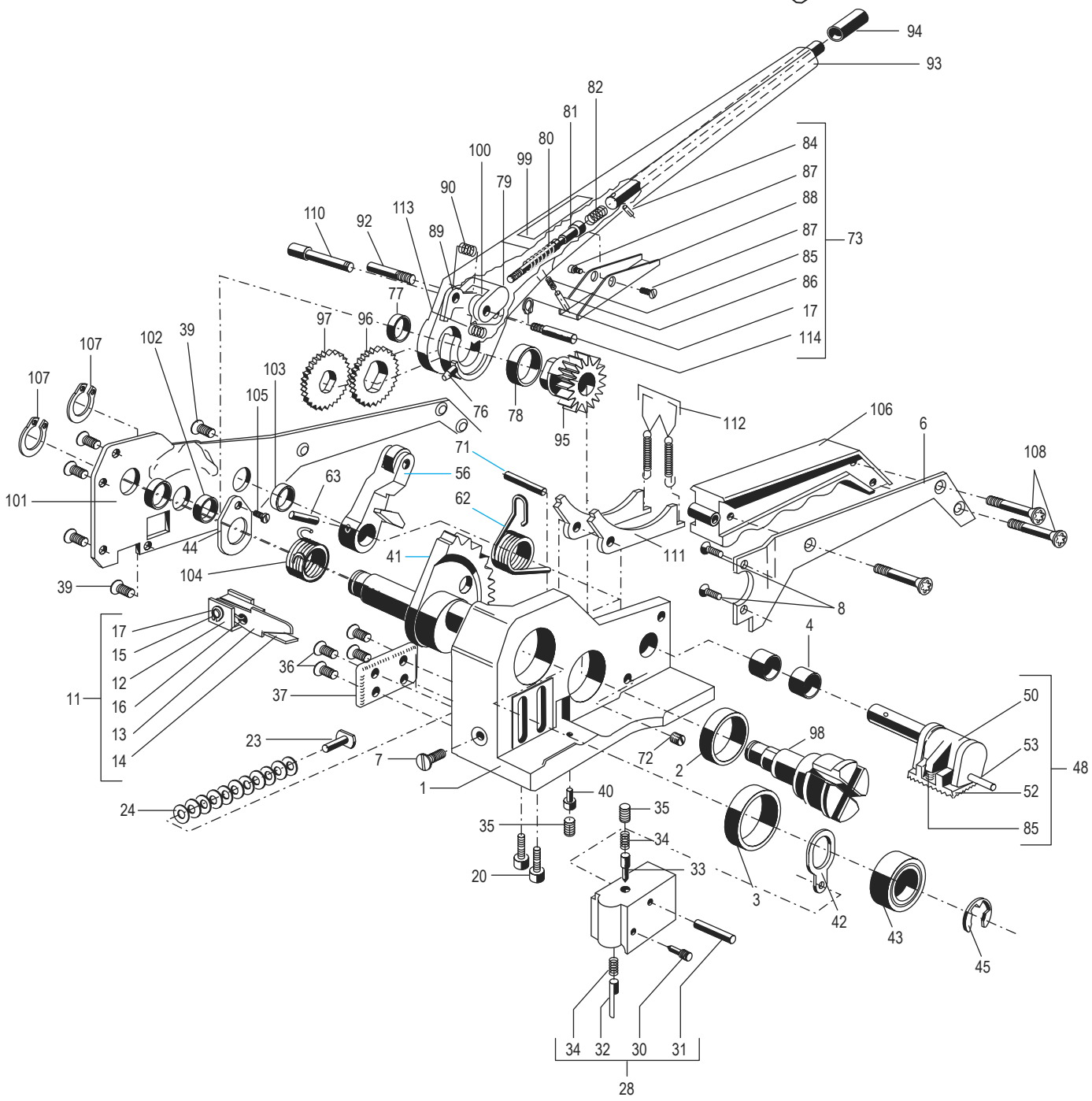

ULINE H-771

ORGAPACK HERRAMIENTA COMBINADA DE 1/2"

800-295-5510
uline.mx

#	DESCRIPCIÓN	CANT.	NO. DE PARTE DE ULINE	NO. DE PARTE DEL FABRICANTE
1	Ensamble de la Cubierta (Partes Incl. 1-4)	1	----------	2973.100.093
2	Cojinete	1	H-771-BBEAR2	2973.100.094
3	Cojinete	1	H-771-BEARNG	2973.100.095
4	Cojinete	2	H-771-BEAR	1933.710.100
6	Placa del Asa	1	H-771-096Q	2973.100.096
7	Tornillo Avellanado	1	H-771-CSCREW	1911.704.089
8	Tornillo de Cabeza Ovalada	2	----------	1821.027.015
11	Ensamble de la Cuchilla (Partes Incl. 12-17)	1	H-771-297	2973.100.211
12	Arco	1	----------	2973.100.101
13	Cuchilla	1	H-771-CUTTER	2973.100.102
14	Contra-Cuchilla	1	----------	2973.100.103
15	Eje	1	----------	2973.100.104
16	Resorte	1	H-771-SP	2973.100.105
17	Anillo Retenedor	2	H-771-RTRING	1920.204.042
20	Tornillo Cilíndrico	2	H-771-020	1910.803.069
23	Perno Tope	1	H-771-23	2973.100.180
24	Resorte tipo Platillo	11	H-771-24	2970.000.010
28	Ensamble de Perforadora (Partes Incl. 30-35)	1	H-771-CPUNCH	2973.100.214
30	Tornillo	1	H-771-030	2973.100.139
31	Perno Cilíndrico	1	H-1275-030	1921.303.121
32	Tope del Sello - Frontal	1	----------	2973.100.023
33	Retenedor de Sello	1	----------	2973.100.025
34	Resorte	2	----------	2973.100.026
35	Tornillo de Ajuste	2	H-771-STSCRW	1910.405.052
36	Tornillo Avellanado	4	H-771-036	1821.027.027
37	Placa de Soporte de Perforación	1	H-771-037Q	2973.100.107
39	Tornillo de Cabeza Ovalada	5	H-1275-008	1821.027.016
40	Perno Tope del Sello - Posterior	1	H-771-SLSTOP	2973.100.108
41	Rueda de Segmento Excéntrica	1	H-771-ECCDS	2973.100.142
42	Placa de Respaldo	1	H-771-PLATE	2973.100.109
43	Rodillo de Presión	1	H-771-PRESS	2973.100.110
44	Rondana - Posterior	1	H-771-044Q	2973.100.181
45	Clip E	1	H-771-1920	1920.110.122
48	Ensamble del Seguro de la Abrazadera (Partes Incl. 50, 52, 53, 85)	1	H-771-CPAWL	2973.100.222
50	Brazo de la Abrazadera	1	----------	2973.100.265
52	Placa de la Abrazadera	1	H-771-1821	1821.046.006
53	Tornillo con Rosca	1	H-771-BLTSCW	2973.100.033
56	Ensamble del Balancín	1	----------	2973.100.215
62	Resorte	1	H-771-SPG	1821.012.009
63	Perno del Rodillo	1	----------	1921.604.201
71	Perno Cilíndrico	1	----------	1921.305.201

ORGAPACK HERRAMIENTA COMBINADA DE 1/2"

800-295-5510
uline.mx

#	DESCRIPCIÓN	CANT.	NO. DE PARTE DE ULINE	NO. DE PARTE DEL FABRICANTE
72	Tornillo de Ajuste	1	----------	1910.006.108
73	Ensamble de la Palanca (Orga Azul) (Partes Incl. 17, 84-88, 114)	1	H-771-LEVER	2973.100.268
76	Perno de Activación	1	H-771-PIN	2973.100.121
77	Casquillo - Posterior	1	H-771-BSHNGB	2973.100.122
78	Casquillo - Frontal	1	H-771-123	2973.100.123
79	Arco	1	H-771-BSHNGF	2973.100.124
80	Resorte - Frontal	1	H-771-080	2973.100.048
81	Varilla de Empuje	1	H-771-081	2973.100.049
82	Resorte	1	H-771-082	2973.100.050
84	Perno de Seguridad	1	H-771-084	2973.100.052
85	Resorte	2	H-771-053SPG	2973.100.053
86	Perno Cilíndrico	1	H-771-86	1921.304.121
87	Tornillo Cilíndrico	2	H-771-87	1910.804.040
88	Placa de Bloqueo	1	----------	2973.100.253
89	Trinquete (Molinete)	1	H-771-#89	2973.100.125
90	Resorte	2	H-771-126	2973.100.126
92	Tornillo con Rosca	1	H-771-92	2973.100.128
93	Eje del Botón Pulsador	1	H-771-093	2973.100.252
94	Botón Pulsador	1	H-771-#94	2973.100.144
95	Mecanismo	1	H-771-GEAR	2973.100.129
96	Rueda del Trinquete (Perforadora)	1	H-771-PUNCH	2973.100.130
97	Rueda del Trinquete (Molinete)	1	H-771-WNDLSS	2973.100.131
98	Molinete	1	----------	2973.100.132
99	Placa de Advertencia	1	----------	1820.090.202
100	Trinquete (Seguro)	1	H-771-#100	2973.100.260
101	Ensamble de la Placa Posterior (Partes Incl. 102, 103)	1	H-771-101	2973.100.133
102	Cojinete	1	H-771-BEAR2	2973.100.134
103	Cojinete	1	H-771-BBEAR	2973.100.135
104	Resorte Excéntrico	1	H-771-#104	2973.100.136
105	Tornillo con Cabeza	1	H-771-105Q	1912.504.068
106	Asa	1	H-771-106	2973.100.138
107	Anillo Retenedor	2	H-771-EXRRNG	1920.212.102
108	Tornillo de Cabeza Ovalada	3	H-771-108	1821.027.017
110	Perno de Bloqueo	1	H-771-SHLDR	2973.100.262
111	Seguro	2	H-771-PAWL	2973.100.258
112	Arco y Resortes de Tensión	1	H-771-SPRNG	2973.100.288
113	Resorte	1	H-771-057	2973.100.057
114	Perno con Rosca	1	H-771-BOLT	2973.100.261

ULINE H-771
OUTIL COMBINÉ ORGAPACK DE 1/2 PO

1 800 295-5510
uline.ca

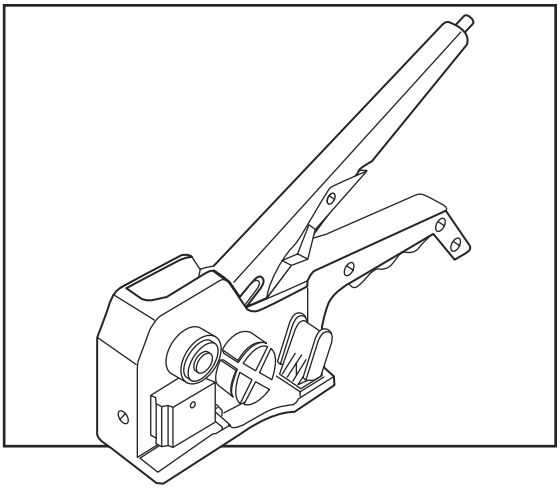

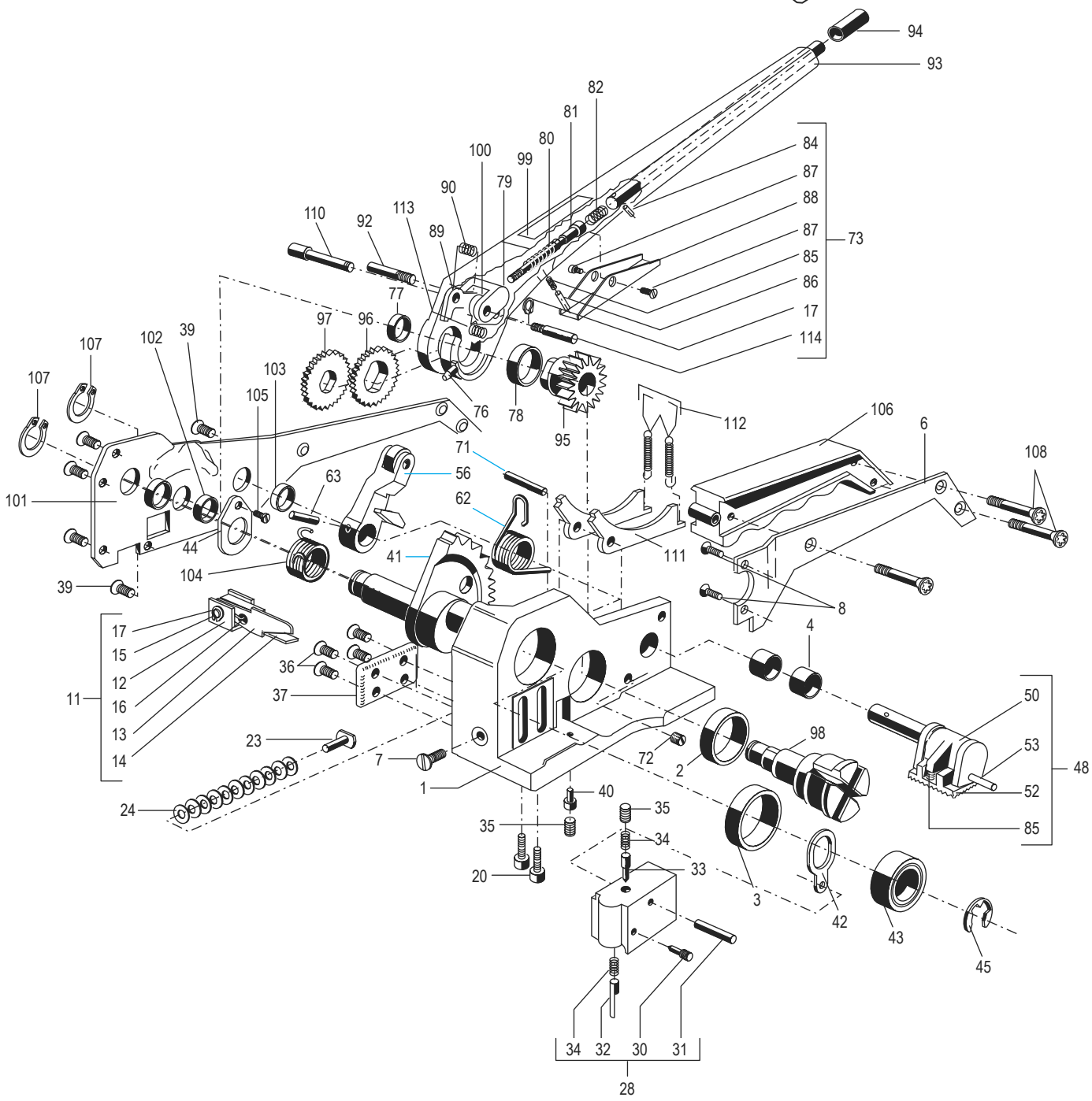

ULINE H-771
OUTIL COMBINÉ ORGAPACK DE 1/2 PO

1 800 295-5510
uline.ca

#	DESCRIPTION	QTY.	RÉF. ULINE	RÉF. DU FABRICANT
1	Ensemble de boîtier (Comprend les pièces 1 à 4)	1	----------	2973.100.093
2	Roulement	1	H-771-BBEAR2	2973.100.094
3	Roulement	1	H-771-BEARNG	2973.100.095
4	Roulement	2	H-771-BEAR	1933.710.100
6	Plaque poignée	1	H-771-096Q	2973.100.096
7	Vis à tête creuse	1	H-771-CSCREW	1911.704.089
8	Vis à tête ovale	2	----------	1821.027.015
11	Ensemble de couteaux (n° 12 à 17 compris)	1	H-771-297	2973.100.211
12	Boucle	1	----------	2973.100.101
13	Couteau	1	H-771-CUTTER	2973.100.102
14	Couteau de comptoir	1	----------	2973.100.103
15	Arbre	1	----------	2973.100.104
16	Ressort	1	H-771-SP	2973.100.105
17	Bague de retenue	2	H-771-RTRING	1920.204.042
20	Vis cylindrique	2	H-771-020	1910.803.069
23	Goupille d'arrêt	1	H-771-23	2973.100.180
24	Ressort à soucoupes	11	H-771-24	2970.000.010
28	Ensemble de poinçons (n° 30 à 35 compris)	1	H-771-CPUNCH	2973.100.214
30	Vis	1	H-771-030	2973.100.139
31	Axe cylindrique	1	H-1275-030	1921.303.121
32	Arrêt de joint – Avant	1	----------	2973.100.023
33	Retenue de joint	1	----------	2973.100.025
34	Ressort	2	----------	2973.100.026
35	Vis de réglage	2	H-771-STSCRW	1910.405.052
36	Vis à tête creuse	4	H-771-036	1821.027.027
37	Plateau retenue de poinçon	1	H-771-037Q	2973.100.107
39	Vis à tête ovale	5	H-1275-008	1821.027.016
40	Cheville d'arrêt de joint d'étanchéité – Arrière	1	H-771-SLSTOP	2973.100.108
41	Roue segment excentrique	1	H-771-ECCDS	2973.100.142
42	Plaque de secours	1	H-771-PLATE	2973.100.109
43	Rouleau de pression	1	H-771-PRESS	2973.100.110
44	Rondelle – arrière	1	H-771-044Q	2973.100.181
45	Pince en E	1	H-771-1920	1920.110.122
48	Ensemble pince à cliquet (comprend les pièces 50, 52, 53, 85)	1	H-771-CPAWL	2973.100.222
50	Bras de pince	1	----------	2973.100.265
52	Plaque à pince	1	H-771-1821	1821.046.006
53	Vis boulon	1	H-771-BLTSCW	2973.100.033
56	Ensemble de bascule	1	----------	2973.100.215
62	Ressort	1	H-771-SPG	1821.012.009
63	Goupille cylindrique	1	----------	1921.604.201
71	Axe cylindrique	1	----------	1921.305.201

ULINE H-771
OUTIL COMBINÉ ORGAPACK DE 1/2 PO

1 800 295-5510
uline.ca

#	DESCRIPTION	QTY.	RÉF. ULINE	RÉF. DU FABRICANT
72	Vis de réglage	1	----------	1910.006.108
73	Ensemble de leviers, Bleu Orga (n° 17, 84 à 88, 114)	1	H-771-LEVER	2973.100.268
76	Goupille d'activation	1	H-771-PIN	2973.100.121
77	Coussinet – Arrière	1	H-771-BSHNGB	2973.100.122
78	Coussinet – Avant	1	H-771-123	2973.100.123
79	Boucle	1	H-771-BSHNGF	2973.100.124
80	Ressort– Avant	1	H-771-080	2973.100.048
81	Tige de poussée	1	H-771-081	2973.100.049
82	Ressort	1	H-771-082	2973.100.050
84	Goupille de verrouillage	1	H-771-084	2973.100.052
85	Ressort	2	H-771-053SPG	2973.100.053
86	Axe cylindrique	1	H-771-86	1921.304.121
87	Vis cylindrique	2	H-771-87	1910.804.040
88	Plaque de verrouillage	1	----------	2973.100.253
89	Rochet (bourriquet)	1	H-771-#89	2973.100.125
90	Ressort	2	H-771-126	2973.100.126
92	Vis boulon	1	H-771-92	2973.100.128
93	Arbre de bouton-poussoir	1	H-771-093	2973.100.252
94	Bouton-poussoir	1	H-771-#94	2973.100.144
95	Engrenage	1	H-771-GEAR	2973.100.129
96	Roue à rochet (poinçon)	1	H-771-PUNCH	2973.100.130
97	Roue à rochet (bourriquet)	1	H-771-WNDLSS	2973.100.131
98	Bourriquet	1	----------	2973.100.132
99	Plaque d'avertissement	1	----------	1820.090.202
100	Rochet (cliquet)	1	H-771-#100	2973.100.260
101	Ensemble de plaque arrière (n° 102, 103 compris)	1	H-771-101	2973.100.133
102	Roulement	1	H-771-BEAR2	2973.100.134
103	Roulement	1	H-771-BBEAR	2973.100.135
104	Ressort excentrique	1	H-771-#104	2973.100.136
105	Vis de tête	1	H-771-105Q	1912.504.068
106	Poignée	1	H-771-106	2973.100.138
107	Bague de retenue	2	H-771-EXRRNG	1920.212.102
108	Vis à tête ovale	3	H-771-108	1821.027.017
110	Boulon d'épaulement	1	H-771-SHLDR	2973.100.262
111	Cliquet	2	H-771-PAWL	2973.100.258
112	Ressorts de tension et boucle	1	H-771-SPRNG	2973.100.288
113	Ressort	1	H-771-057	2973.100.057
114	Boulon fileté	1	H-771-BOLT	2973.100.261