Para Español, vea página 2.
Pour le français, consulter la page 3.

ULINE H-9773
PLASTIC LEVER ACTION PUMP

1-800-295-5510
uline.com

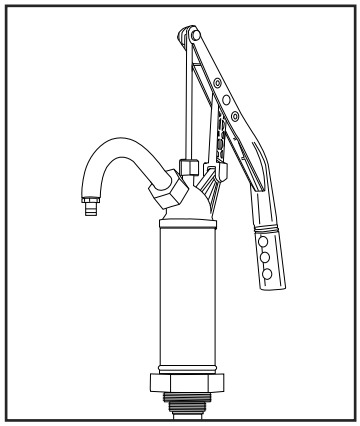

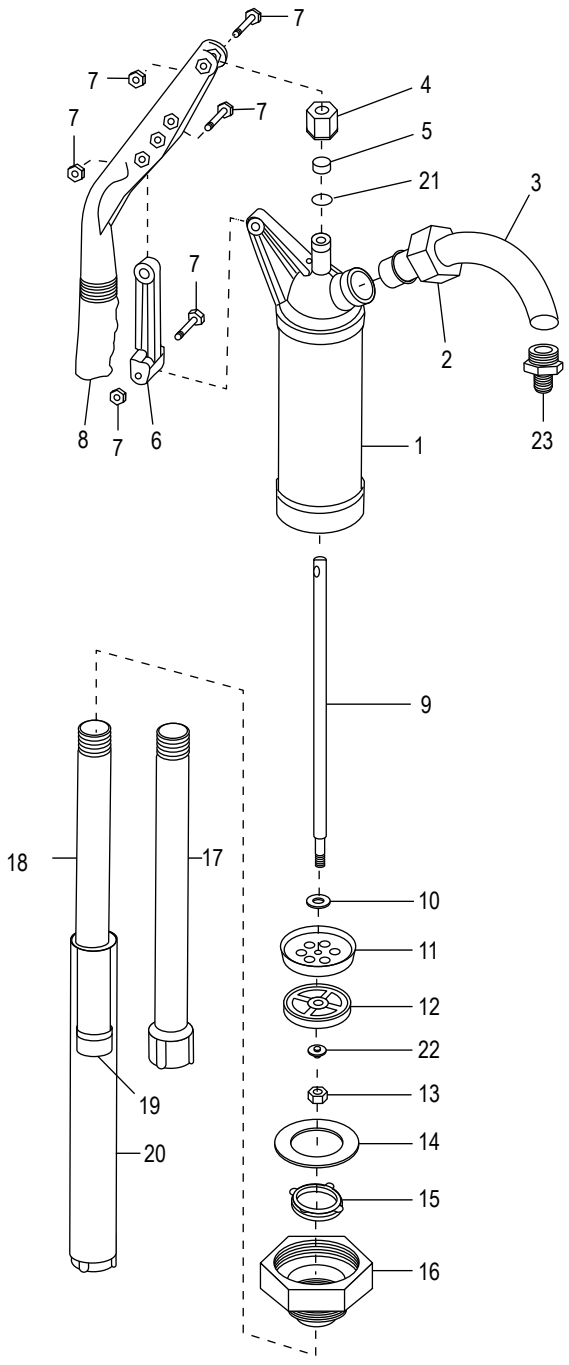

#	DESCRIPTION	QTY.	ULINE PART NO.	MFG PART NO.
1	Pump Body	1	----------	P490S-1
2	Coupling Nut	1	----------	P490S-2
3	Spout	1	----------	P490S-3
4	Piston Rod Nut	1	----------	P490S-4
5	Piston Rod Seal	1	----------	P490S-5
6	Handle Lever	1	H-9773-PIVOT	P490S-6
7	Nut and Screw	3	----------	P490S-7
8	Handle	1	H-9773-HAND	P490S-8
9	Piston Rod	1	----------	P490S-9
10	Valve Plate	1	H-9773-VPLTQ	P490S-10
11	Valve Base	1	H-9773-VBASQ	P490S-11
12	Rod Plate	1	H-9773-RODPQ	P490S-12
13	Valve Nut	1	H-9773-VNUTQ	P490S-13
14	Foot Valve Seal	1	H-9773-FTVLQ	P490S-14
15	Base Plate	1	H-9773-BPLTQ	P490S-15
16	Base	1	----------	P490S-16
17	Tube	1	H-9773-ITUBE	P490S-17
18	Upper Telescopic Tube	1	H-9773-UTELQ	P490S-18
19	Telescopic Tube Seal	1	----------	P490S-19
20	Bottom Telescopic Tube	1	----------	P490S-20
21	O-Ring	1	----------	P490S-21
22	Valve Plate Washer	1	H-9773-VPWSQ	P490S-22
23	Spout Reducer	1	----------	P490S-23

ULINE H-9773

BOMBA DE PALANCA DE PLÁSTICO

800-295-5510
uline.mx

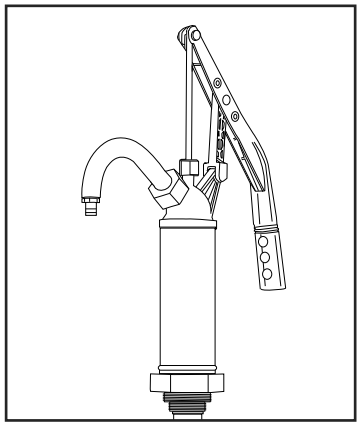

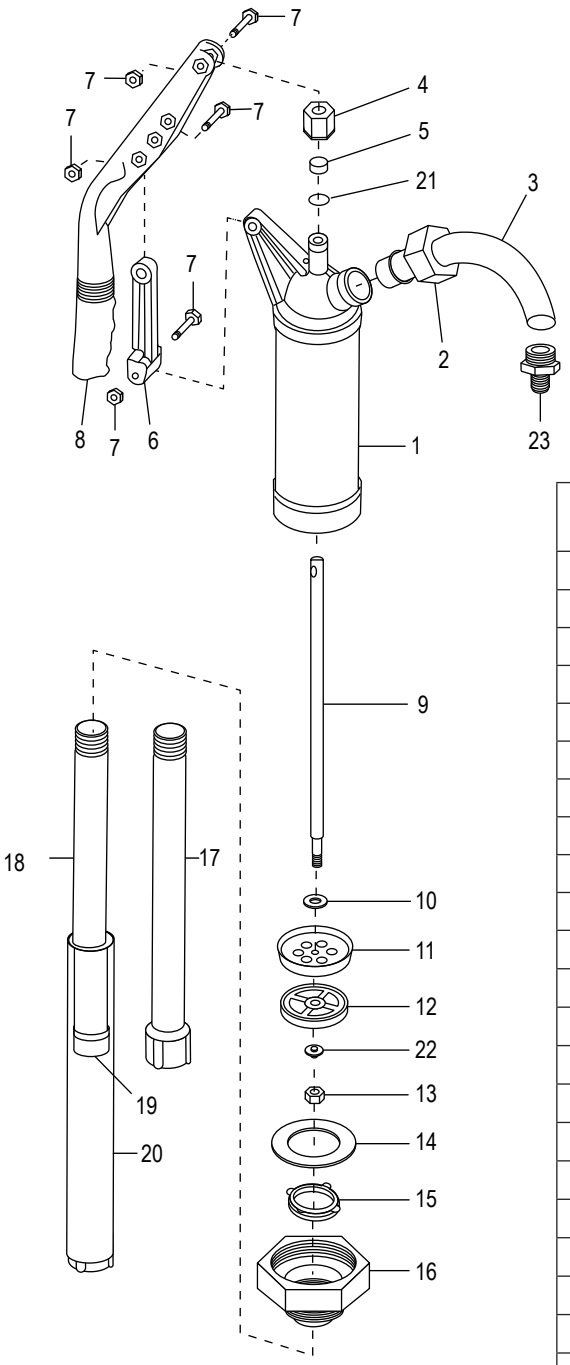

#	DESCRIPCIÓN	CANT.	NO. DE PARTE DE ULINE	NO. DE PARTE DEL FABRICANTE
1	Cuerpo de la Bomba	1	----------	P490S-1
2	Tuerca de Cople	1	----------	P490S-2
3	Boquilla	1	----------	P490S-3
4	Tuerca de la Varilla del Pistón	1	----------	P490S-4
5	Sello de la Varilla del Pistón	1	----------	P490S-5
6	Palanca del Mango	1	H-9773-PIVOT	P490S-6
7	Tuerca y Tornillo	3	----------	P490S-7
8	Mango	1	H-9773-HAND	P490S-8
9	Varilla del Pistón	1	----------	P490S-9
10	Placa de la Válvula	1	H-9773-VPLTQ	P490S-10
11	Base de la Válvula	1	H-9773-VBASQ	P490S-11
12	Placa de la Varilla	1	H-9773-RODPQ	P490S-12
13	Tuerca de la Válvula	1	H-9773-VNUTQ	P490S-14
14	Sello de la Válvula del Pedal	1	H-9773-FTVLQ	P490S-13
15	Placa de la Base	1	H-9773-BPLTQ	P490S-15
16	Base	1	----------	P490S-16
17	Tubo	1	H-9773-ITUBE	P490S-17
18	Tubo Telescópico Superior	1	H-9773-UTELQ	P490S-18
19	Sello del Tubo Telescópico	1	----------	P490S-19
20	Tubo Telescópico Inferior	1	----------	P490S-20
21	Anillo Tórico	1	----------	P490S-21
22	Rondana para Placa de la Válvula	1	H-9773-VPWSQ	P490S-22
23	Reductor de Boquilla	1	----------	P490S-23

ULINE H-9773
POMPE À LEVIER EN PLASTIQUE

1 800 295-5510
uline.ca

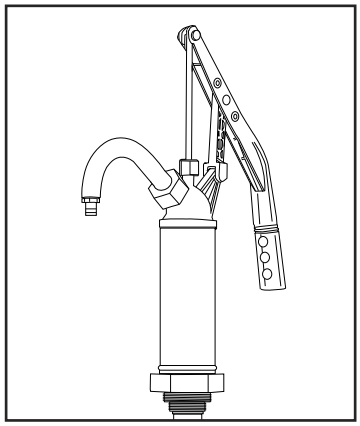

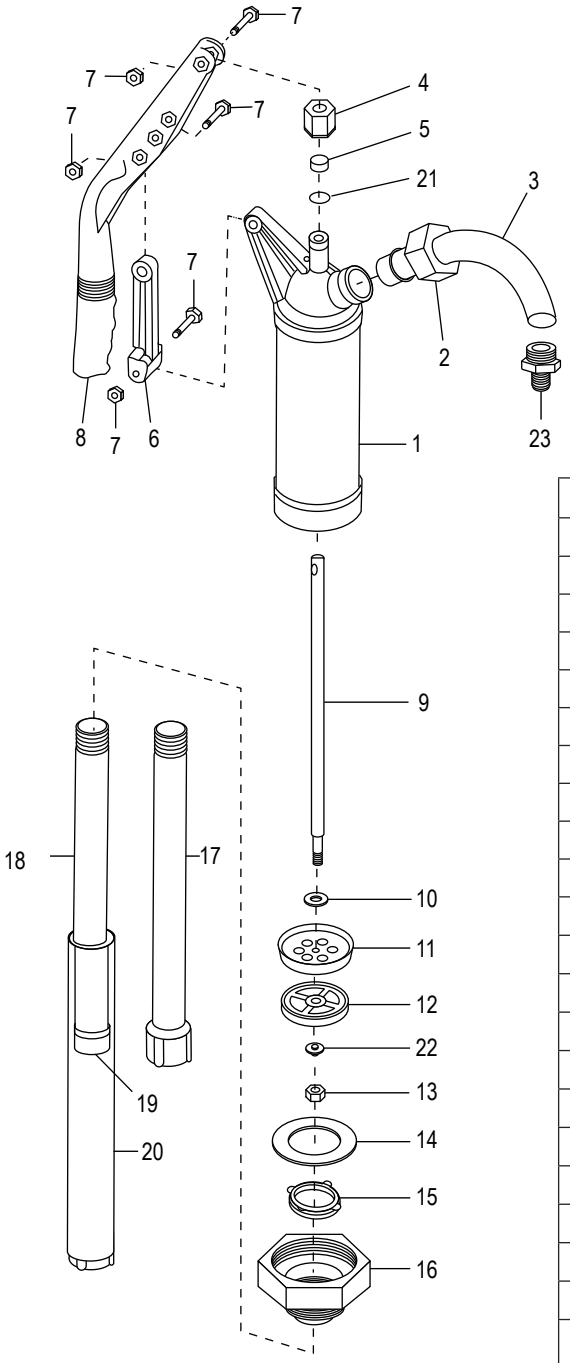

#	DESCRIPTION	QTÉ	RÉF. ULINE	RÉF. DU FABRICANT
1	Boîtier de pompe	1	----------	P490S-1
2	Écrou de couplage	1	----------	P490S-2
3	Bec verseur	1	----------	P490S-3
4	Écrou de tige de piston	1	----------	P490S-4
5	Joint de tige de piston	1	----------	P490S-5
6	Levier de poignée	1	H-9773-PIVOT	P490S-6
7	Écrou et vis	3	----------	P490S-7
8	Poignée	1	H-9773-HAND	P490S-8
9	Tige de piston	1	----------	P490S-9
10	Plaque porte-soupape	1	H-9773-VPLTQ	P490S-10
11	Socle de soupape	1	H-9773-VBASQ	P490S-11
12	Plaque porte-tige	1	H-9773-RODPQ	P490S-12
13	Écrou de soupape	1	H-9773-VNUTQ	P490S-14
14	Joint de clapet de pied	1	H-9773-FTVLQ	P490S-13
15	Plaque de base	1	H-9773-BPLTQ	P490S-15
16	Base	1	----------	P490S-16
17	Tube	1	H-9773-ITUBE	P490S-17
18	Tube télescopique supérieur	1	H-9773-UTELQ	P490S-18
19	Joint de tube télescopique	1	----------	P490S-19
20	Tube télescopique inférieur	1	----------	P490S-20
21	Joint torique	1	----------	P490S-21
22	Rondelle de plaque porte-soupape	1	H-9773-VPWSQ	P490S-22
23	Réducteur de bec verseur	1	----------	P490S-23