ULINE H-12039RT

INDUSTRIAL OFFICE U-DESK WITH HUTCH

66 x 102"

1-800-295-5510
uline.com

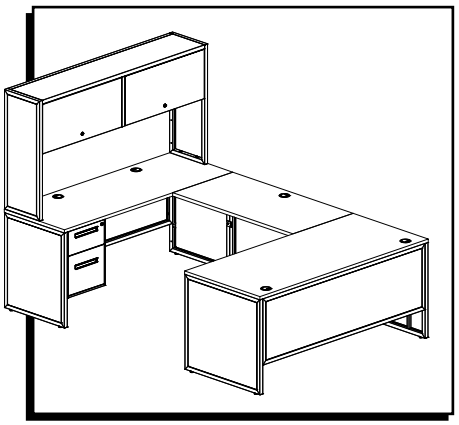

RIGHT-HAND CONFIGURATION

OUTSIDE VIEW

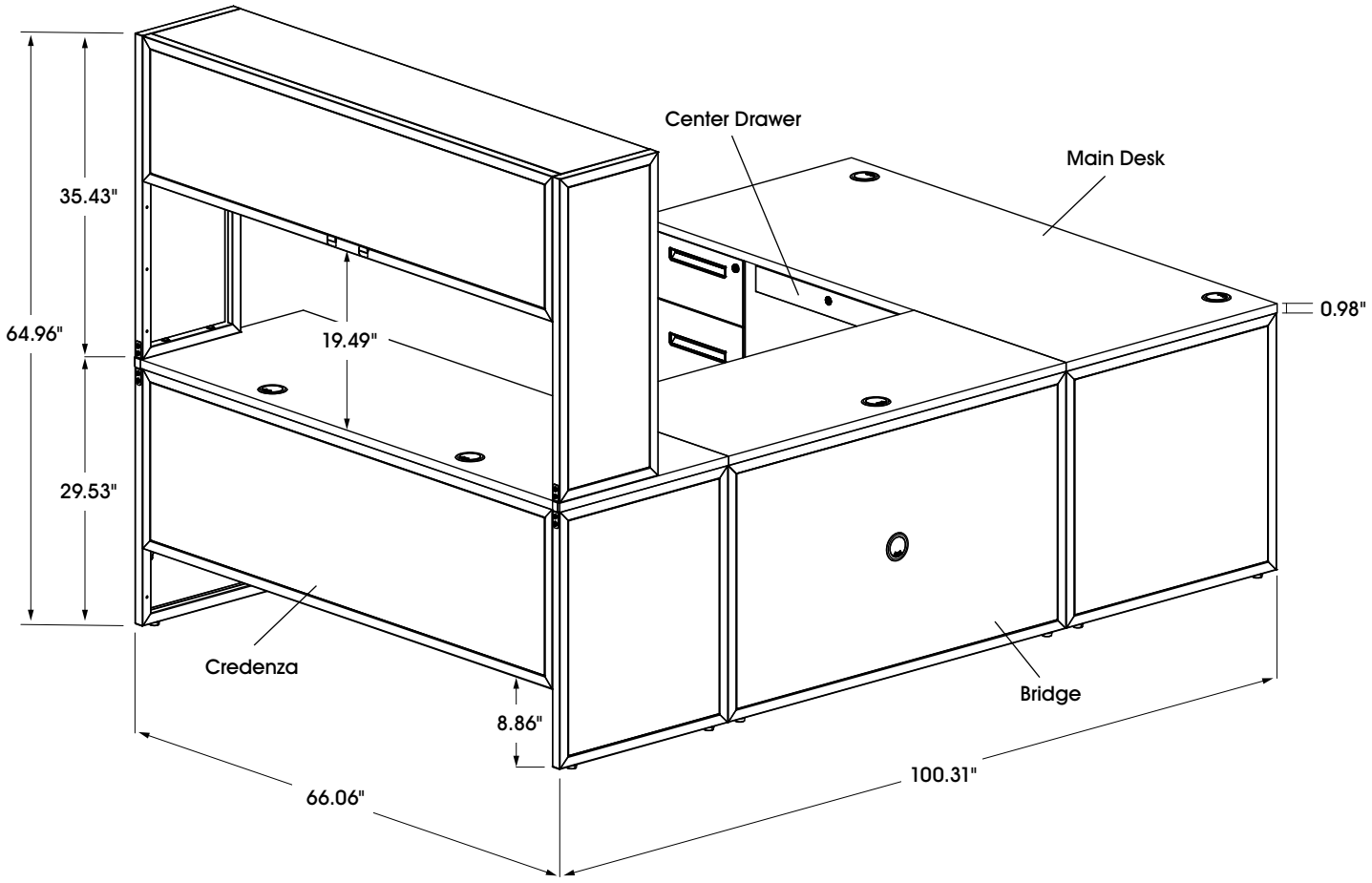

NOTE: Center drawer can be installed underneath main desk (shown above), bridge or credenza.

RIGHT-HAND CONFIGURATION CONTINUED

INSIDE VIEW

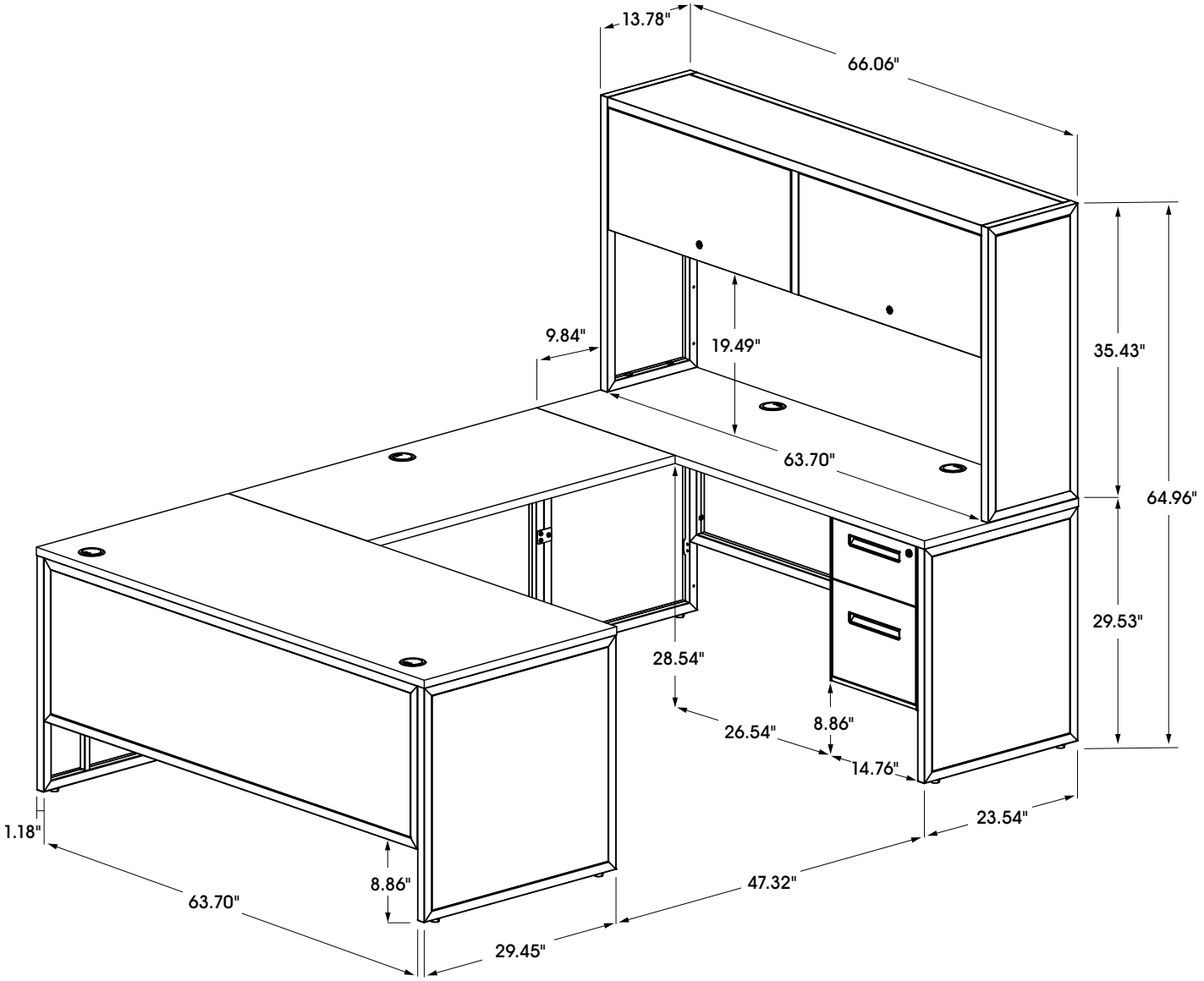

LEFT-HAND CONFIGURATION

OUTSIDE VIEW

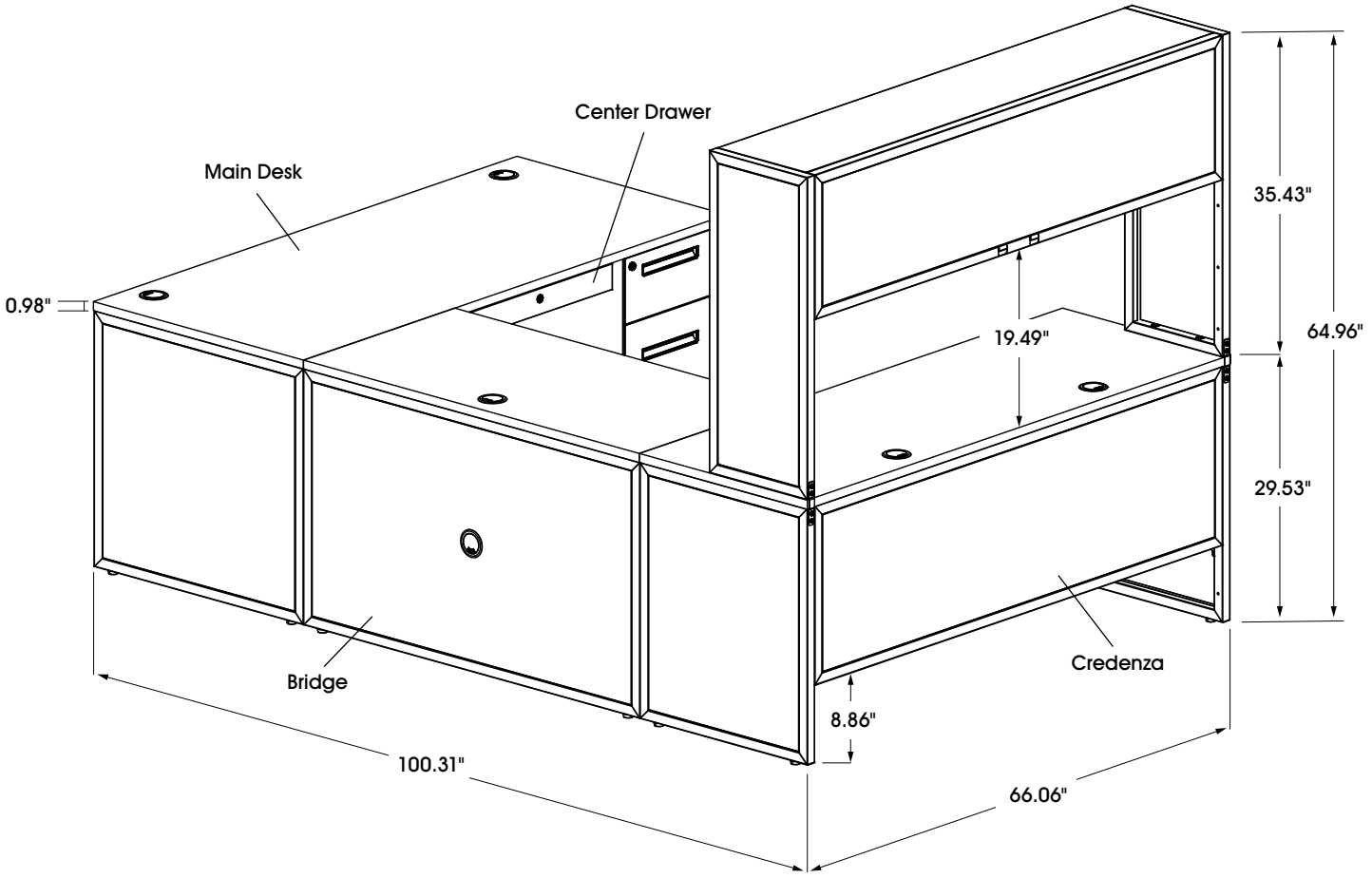

NOTE: Center drawer can be installed underneath main desk (shown above), bridge or credenza.

LEFT-HAND CONFIGURATION CONTINUED

INSIDE VIEW

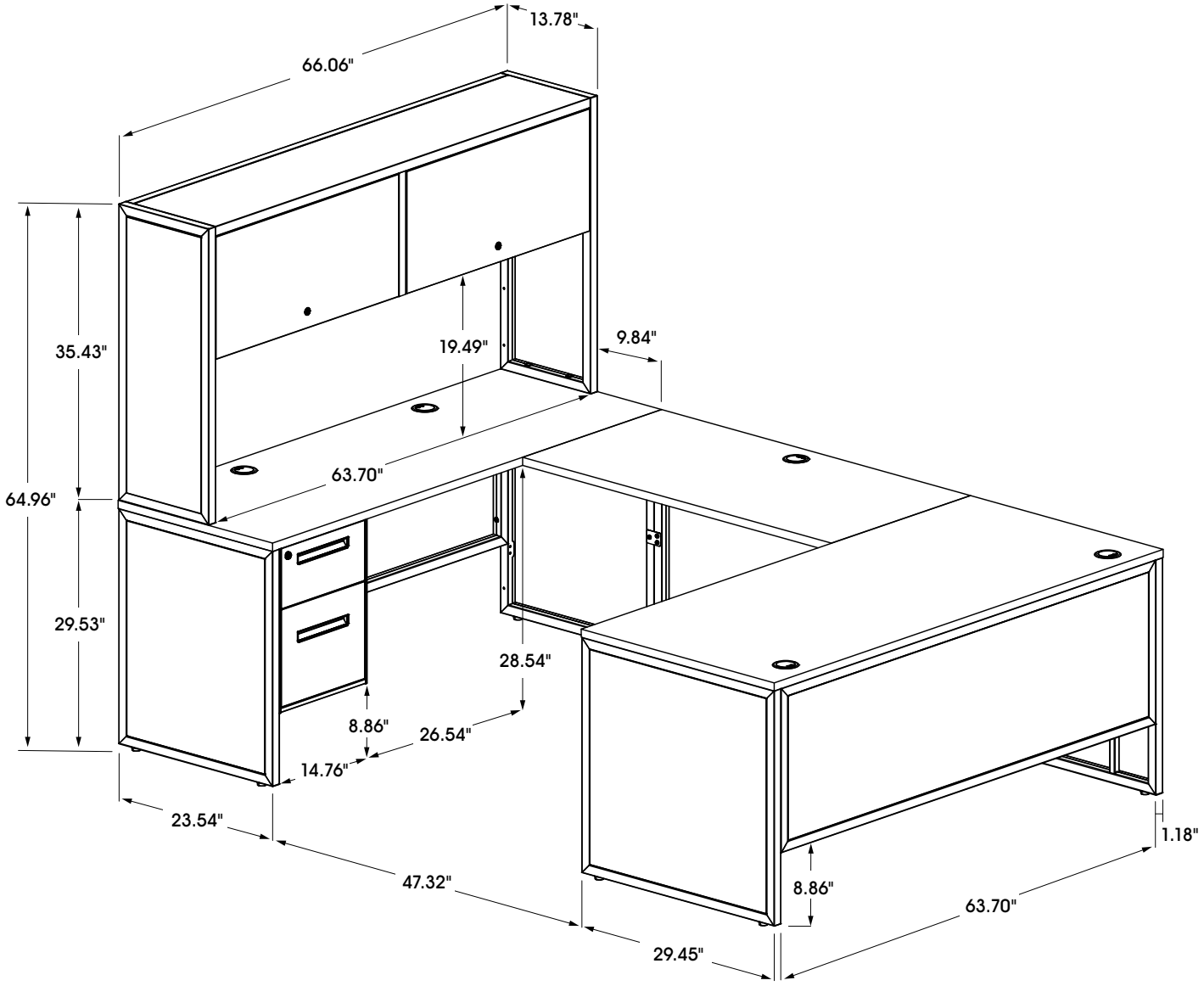

RIGHT-HAND CONFIGURATION

TOP VIEW

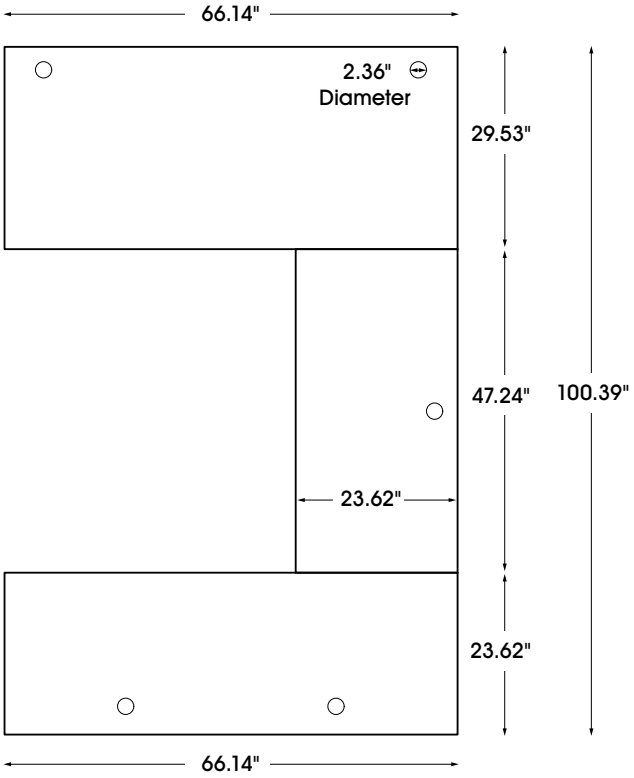

LEFT-HAND CONFIGURATION

TOP VIEW

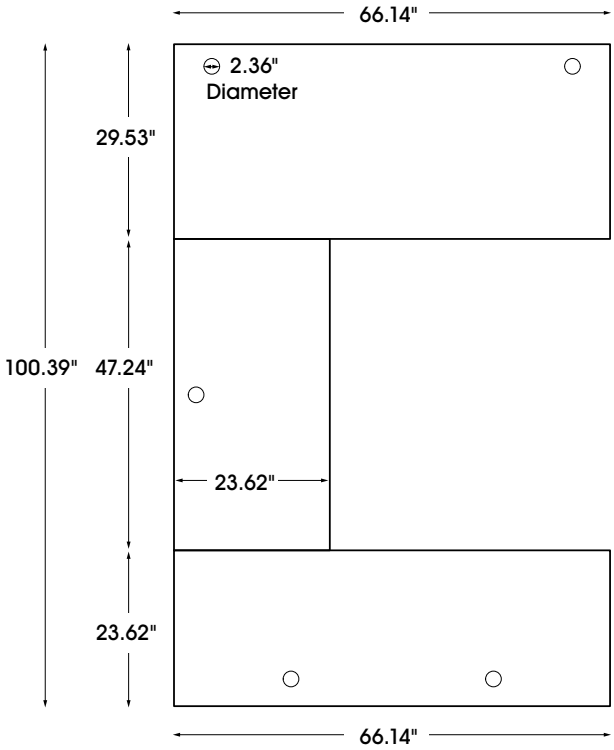

PEDESTAL FILE CONFIGURATION

PEDESTAL FILE – OUTSIDE VIEW

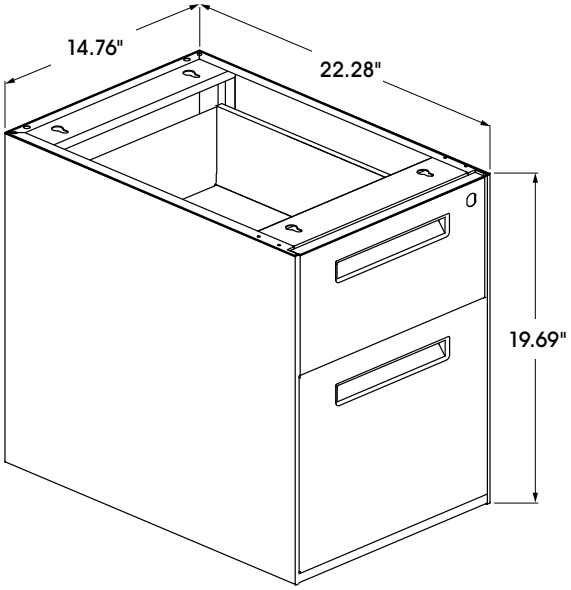

BOX DRAWER – INSIDE VIEW

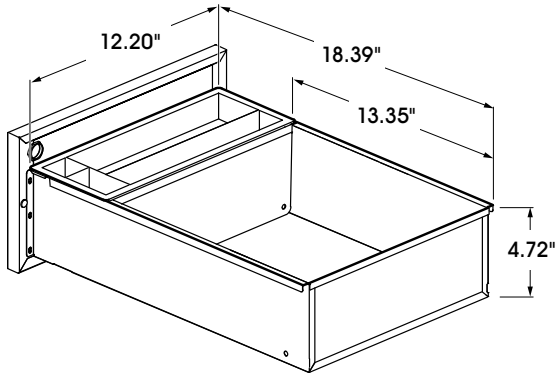

FILE DRAWER – INSIDE VIEW

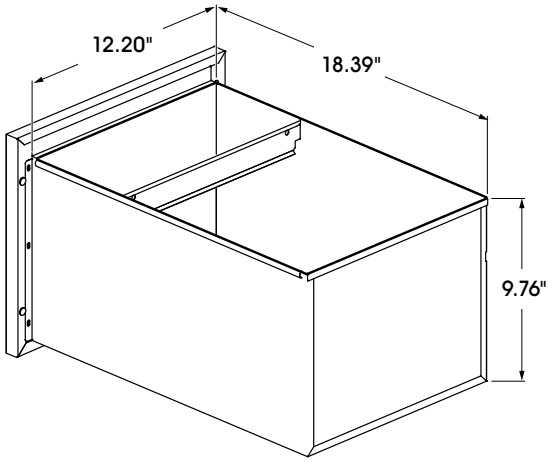

CENTER DRAWER CONFIGURATION

CENTER DRAWER – OUTSIDE VIEW

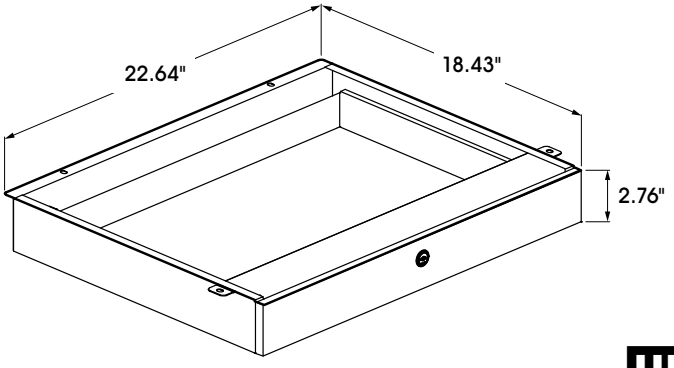

CENTER DRAWER – INSIDE VIEW

