DEPARTMENT OF TRANSPORTATION
PERFORMANCE ORIENTED PACKAGE TESTING
CERTIFICATION

Testing Performed for:
Berry Global
101 Oakley Street
Evansville, IN 47710
812-424-2904

PERIODIC RETEST OF
5-GALLON REMOVABLE HEAD PLASTIC DRUMS,
TESTED WITH FIVE (5) TYPES OF CLOSURES ON THE TOP LID AND A BLANK LID
JOB NO. 26547U

PACKAGING TYPE / DESIGNATION NUMBER

1H2/Y1.5/30/**
USA/+AB3613

**** Insert the Year Packaging is Manufactured**
Certification Expires July 23, 2027

TEST SUMMARY

Drop, 49 CFR 178.603	**Packing Group II - 1.5 meters, 1.5 SG - Pass**
Leakproofness, 49 CFR 178.604	**Packing Group II - 20 kPa, 5 Minutes - Pass**
Hydrostatic Pressure, 49 CFR 178.605	**Packing Group II - 30 kPa, 30 Minutes - Pass**
Stacking, 49 CFR 178.606	**361.1 Kg - Dynamic Compression - Pass**
Vibration, 49 CFR 178.608	**1 Hr. - 255 RPM, 1" Disp. (peak-to-peak) - Pass**

Package Certified by:

Yury Beyderman

Yury Beyderman

Packager Testing Manager

Certification Date:

July 23, 2026

GAYNES LABS, INCORPORATED
9708 Industrial Drive • Bridgeview, Illinois 60455
Member of "American Council of Independent Laboratories"
Phone: 708-233-6655
Fax: 708-233-6985
Email: gayneslabs@aol.com
Website: www.gaynestesting.com

GAYNES LABS, INCORPORATED IS THE CURRENT DOT UN THIRD-PARTY CERTIFICATION AGENCY UNDER 107.403

Gaynes Laboratory, Inc.

SECTION 2 - DESCRIPTION OF PACKAGING:

5-Gallon Removable Head Plastic Drum with Six (6) Closure Designs on the Top Lid and a Blank Lid:
1. Non-Vented Screw Cap Closure
2. Screw Cap Closure with Microporous Vent
3. Non-Vented Crimp-on Closure
4. Non-Vented Press-Fit Closure
5. Press-Fit Closure with Microporous Vent
6. Top Lid Without Closures (Blank)

MANUFACTURER (drums and lids): Pails - Berry Global, Inc., Fremont, IN. Lids – Berry Global, Inc., Fulton, KY

Overall Tare Weight of Package: With Screw Cap Closure = 1.4109 kg
With Crimp-On Closure = 1.4163 kg
With Press-Fit Closure = 1.4100 kg
With Blank Lid = 1.3693 kg

Test Contents: Tap water, Antifreeze Solution (SG 1.075), Air

Minimum Weight of Package as Tested: With Screw Cap Closure = 20.55 kg
With Crimp-On Closure = 20.10 kg
With Press-Fit Closure = 20.33 kg
With Blank Lid = 20.87 kg

Packing Group of Certification: II
Specific Gravity of Certification: 1.5

OVERFLOW CAPACITY:
(With Lids/closure Installed) With Screw Cap = 5.057 gallons (19.142 liters)
With Crimp-On Closure = 4.937 gallons (18.688 liters)
With Press-Fit Closure = 4.997 gallons (18.915 liters)
Blank = 5.152 gallons (19.504 liters)

MATERIAL (drums and lids): Natural Color High Density Polyethylene lids and white Color High Density Polyethylene drums, (per marking, chemical analysis was not conducted). Melt index 4.5 gr/10 min., density 0.953 g/cm3 for drums and lids.

METHOD OF CONSTRUCTION (drums and lids): Injection Molded

DRUM INFORMATION:

Empty Weight: 908.5 gr.

Height: 36.51 cm (14.375") without lid, 37.47 cm (14.75") with lid installed, 36.20 cm (14.25") stacking height

Bottom O. D.: 26.26 cm (10.34")

Top O. D.: 30.02 cm (11.82")

Rim O. D.: 31.12 cm (12.25") - handle ears

Thickness: Body - 2.248 mm (0.0885") min., 2.484 mm (0.0978") max.

Bottom Head - 2.525 mm (0.0994") min., 2.675 mm (0.1053") max.

Gaynes Laboratory, Inc.

SECTION 2 - DESCRIPTION OF PACKAGING (Cont'd):

DRUM INFORMATION (Cont'd):

Drawing Number: SPECP-2035P-UN

Manufacture: Berry Global, Inc., Fremont, IN

Markings: Embossed (bottom) - Letica Corporation, Recycling Symbol 2, HDPE, NRC 90 MIL, Manufacturing Date, 9505-1, P2035, Label (Body) – Child Safety Label
(UN)1H2/Y1.5/30/26/USA/+AB3613 "When used with L-3100 Cover"
(UN)1H2/Y27/S/26/USA/+AB3148 "When used with L-4021 Cover"

Handle: 3.61 mm (0.142") dia. steel wire installed into two designated openings on the rim, 48.4 gr. An 8.41 cm (3.31") long white color plastic material grip is positioned in the center of the handle, 2.9 gr.

LID INFORMATION:

Manufacturer: Berry Global, Inc., Fulton, KY

Drawing Numbers: SPECL-3100P, SPECL-3100_70mm_GAYNES, SPECL-3100_APC_GAYNES

Weight: Screw Cap Closure Design – 451.1 gr. (with Closure & Gasket)
Crimp-on Closure Design – 456.5 gr. (with Closure & Gasket)
Press-Fit Closure Design – 450.2 gr. (with Closure & Gasket)
Blank Lid Design – 409.5 gr. (with Closure & Gasket)

O. D.: 31.43 cm (12.375") - all designs

Thickness (Measured along the Centerline):
Screw Cap Closure Design – 1.735 mm (0.0683") min., 2.113 mm (0.0832") max.
Crimp-on Closure Design – 1.692 mm (0.0666") min., 2.149 mm (0.0846") max.
Press-Fit Closure Design – 1.689 mm (0.0665") min., 2.169 mm (0.0854") max.
Blank Lid Design – 1.778 mm (0.0700") min., 2.286 mm (0.0900") max.

Gasket (same for all designs): Black colored EPDM hollow tube fused into a ring, 29.1 cm (11.46") Ring O. D., 6.43 mm (0.253") Tube O. D., 25.2 gr. (Mfg: Letica Corporation, Rochester MI. P/N: SPECGA-1567P)

Markings: Embossed Outside – (UN)1H2/Y30/S/26/USA/+AB3564 "When used with P2020 Pail"
(UN)1H2/Y1.5/30/26/USA/+AB3613 "When used with P2035 Pail"
(UN)1H2/Y1.5/30/26/USA/+AB3772 "When used with P1062 Pail"
Embossed Inside – 9637-1-2

Gaynes Laboratory, Inc.

SECTION 2 - DESCRIPTION OF PACKAGING (Cont'd):

SCREW-CAP CLOSURE INFORMATION:

Manufacturer: Tri-Sure Closures Worldwide, Carol Stream, IL

Drawing Number: TSF-2000067

Overall Dimensions: Closure – 7.98 cm (3.140") O.D., 1.68 cm (0.660") Tall. Gasket – 6.29 cm (2.475") O.D., 5.47 cm (2.152") I.D., 0.29 cm (0.113") Thick

Weight: Closure – 22.7 gr. Gasket – 2.7 gr.

Material: Closure – Natural color HDPE, Gasket – White EPDM

Markings: Embossed on Top – Plasticap, 70mm – 8 TPI

Threads: Style - Buttress, Pitch - 3.0mm, Size – 70mm

Torque: 120 in-lbs.

CRIMP-ON CLOSURE INFORMATION:

Manufacturer: Tri-Sure Closures Worldwide, Carol Stream, IL

Drawing Number: CPD939634900

Overall Dimensions: Closure – 6.82 cm (2.687") O.D., 2.92 cm (1.149") Tall

Weight: 33.9 gr.

Material: Cap – White HDPE, Ring – Electroplated Steel, Spout – Natural LDPE

Markings: Embossed on Top – UNI-GRIP ®

PRESS-FIT CLOSURE INFORMATION:

Manufacturer: APC Products Ltd., Canada

Drawing Number: AD9-2.2

Overall Dimensions: Closure – 7.48 cm (2.945") O.D., 2.77 cm (1.089") Tall

Weight: 27.1 gr.

Material: Cap – White HDPE, Spout – Natural LDPE

Markings: Embossed on Top – APC-2, APC Products Canada, pailclosures.com, Pat. No.

LID CLOSING INSTRUCTIONS:

The crimp-on closures were applied with pneumatic crimper at Letica Corp. The screw caps were applied at Gaynes Labs, Inc. with torque wrench, preset to 120 in.-lbs. The lids were applied with pneumatic plate closer set at 110 PSI at Gaynes Labs, Inc. The gap between the bottom of the plate and the top of the lid before application was set to 2".

Gaynes Laboratory, Inc.

SECTION 3 - TESTING
TEST DESCRIPTIONS AND RESULTS:

PACKAGE PREPARATION:
The drums were filled to a minimum of 98% of their overflow capacity with antifreeze solution for the Drop Test. The drums were filled to a minimum of 98% of their overflow capacity with tap water for Stacking and Vibration Tests. The drums were completely filled with tap water for the Hydrostatic Pressure Test. The drums were empty for the Leakproofness Test.

DROP TEST: (49 CFR 178.603)

Six (6) drums with each closure design were tested. Each drum was filled to 98% of its maximum capacity with antifreeze solution. The drums were maintained at 0° F (-18° C) until the solution/container reached the aforementioned temperature (24 hours). A drum was removed from the environmental chamber and immediately dropped onto a smooth flat horizontal concrete surface in an orientation described below. The drop height for Packing Group II, SG 1.5, is 1.5 meters (calculation for drop height is provided in Section 4). For the diagonal drops, the center of gravity of drums was vertically over the point of impact. Immediately following the drop sequences each drum was laid on its side for one minute and visually inspected for leakage after equilibrium had been reached between the internal and external pressures. The procedure was repeated for each sample orientation as listed below (See Photos No. 1 through 4).

CRITERIA FOR PASSING THE TEST:

There shall be no leakage when equilibrium has been reached between the internal and external pressures. Slight discharge from a closure is permitted if it ceases immediately after impact with no further leakage.

DROP TEST RESULTS:

Sample	Orientation	Non-Vented Screw Cap Closure	Vented Screw Cap Closure
1	Diagonal Top Chime (On the Cap)	Minor lid distortion, no leakage*	Minor lid distortion, no leakage*
2	Diagonal Top Chime (On the Cap)	Minor lid distortion, no leakage	Minor lid distortion, no leakage
3	Diagonal Top Chime (On the Cap)	Minor lid distortion, no leakage	Minor lid distortion, no leakage
4	Flat on Side (On the Cap)	Minor side distortion, no leakage*	Minor side distortion, no leakage*
5	Flat on Side (On the Cap)	Minor side distortion, no leakage	Minor side distortion, no leakage
6	Flat on Side (On the Cap)	Minor side distortion, no leakage	Minor side distortion, no leakage

Gaynes Laboratory, Inc.

DROP TEST RESULTS (Cont'd):

Sample	Orientation	Non-Vented Press-Fit Closure	Vented Press-Fit Closure
1	Diagonal Top Chime (On the Cap)	Minor lid distortion, no leakage*	Minor lid distortion, no leakage*
2	Diagonal Top Chime (On the Cap)	Minor lid distortion, no leakage	Minor lid distortion, no leakage
3	Diagonal Top Chime (On the Cap)	Minor lid distortion, no leakage	Minor lid distortion, no leakage
4	Flat on Side (On the Cap)	Minor side distortion, no leakage*	Minor side distortion, no leakage*
5	Flat on Side (On the Cap)	Minor side distortion, no leakage	Minor side distortion, no leakage
6	Flat on Side (On the Cap)	Minor side distortion, no leakage	Minor side distortion, no leakage

Sample	Orientation	Non-Vented Crimp-On Closure	Blank Lid
1	Diagonal Top Chime (On the Cap)	Minor lid distortion, no leakage*	Minor lid distortion, no leakage*
2	Diagonal Top Chime (On the Cap)	Minor lid distortion, no leakage	Minor lid distortion, no leakage
3	Diagonal Top Chime (On the Cap)	Minor lid distortion, no leakage	Minor lid distortion, no leakage
4	Flat on Side (On the Cap)	Minor side distortion, no leakage*	Minor side distortion, no leakage*
5	Flat on Side (On the Cap)	Minor side distortion, no leakage	Minor side distortion, no leakage
6	Flat on Side (On the Cap)	Minor side distortion, no leakage	Minor side distortion, no leakage

* The drop test result for each design type is a Pass (See Photos No. 5 & 6 for Damage)

Gaynes Laboratory, Inc.

LEAKPROOFNESS TEST: (49 CFR 178.604)

Three (3) drums with non-vented closures of each type and with blank lids, each individually tested, were inspected for air leakage while being submersed under water and subjected to a constant internal air pressure of 20 kPa. (See Photo No. 7).

CRITERIA FOR PASSING THE TEST:

A packaging passes the test if there is no leakage of air from the packaging.

LEAKPROOFNESS TEST RESULTS:

Sample No.	Screw Cap Closure	Crimp-on Closure	Friction-Fit Closure	Blank Lid
7	No Leakage - Pass	No Leakage - Pass	No Leakage - Pass	No Leakage - Pass
8	No Leakage - Pass	No Leakage - Pass	No Leakage - Pass	No Leakage - Pass
9	No Leakage - Pass	No Leakage - Pass	No Leakage - Pass	No Leakage - Pass

HYDROSTATIC PRESSURE TEST: (49 CFR 178.605)

Three (3) drums with non-vented closures of each type and blank lids were separately tested. Each drum was completely filled with water and subjected to a constant hydrostatic pressure of 30 kPa for a period of 30 minutes. (See Photo No. 8). The drum was visually inspected during the testing procedure.

CRITERIA FOR PASSING THE TEST:

A package passes the hydrostatic test if, for each test sample, there is no leakage of liquid from the package.

HYDROSTATIC PRESSURE TEST RESULTS:

Sample No.	Screw Cap Closure	Crimp-on Closure	Friction-Fit Closure	Blank Lid
7	No Leakage - Pass	No Leakage - Pass	No Leakage - Pass	No Leakage - Pass
8	No Leakage - Pass	No Leakage - Pass	No Leakage - Pass	No Leakage - Pass
9	No Leakage - Pass	No Leakage - Pass	No Leakage - Pass	No Leakage – Pass

* For each design type, the lid distorted during the pressure test. Water Temp. (°F) – 51.6 (See Photo No. 8)

STACKING TEST: (49 CFR 178.606)
Three (3) samples of each design were tested using a dynamic compression machine. The test was conducted at 73° F temperature and 50% relative humidity on empty, unsealed drums (closure removed from the top lid). A test sample was centered on the bottom platen of the testing machine. The platens were brought together until a contact with the drum occurred. An initial preload of 50 pounds was applied to ensure a definite contact between the test sample and platens. The distance between platens at that time was recorded as zero deformation. A load, equivalent to the total weight of identical drums which might be stacked on the bottom drum during transport (minimum height 3 meters) multiplied by a safety factor of 1.5, for dynamic compression method, was applied to each test sample at a platen speed of 0.5 inches per minute (calculation for stacking weight is provided in Section 4). A load of 361.1 Kg was applied to each drum configuration (See Photo No. 10).

Gaynes Laboratory, Inc.

CRITERIA FOR PASSING THE TEST:

For the dynamic compression test, a container passes the test if, after application of the required load, there is no buckling of the sidewalls sufficient to cause damage to its expected contents; in no case may the maximum deflection exceed one inch.

STACKING TEST RESULTS:

Sample No.	Non-Vented Screw Cap Closure	Vented Screw Cap Closure	Non-Vented Friction-Fit Closure	Vented Friction-Fit Closure
13	Held load, <1" dist.	Held load, <1" dist.	Held load, <1" dist.	Held load, <1" dist.
14	Held load, <1" dist.	Held load, <1" dist.	Held load, <1" dist.	Held load, <1" dist.
15	Held load, <1" dist.	Held load, <1" dist.	Held load, <1" dist.	Held load, <1" dist.

	Non-Vented Crimp-On Closure	Vented Crimp-On Closure	Blank Lid
13	Held load, <1" dist.	Held load, <1" dist.	Held load, <1" dist.
14	Held load, <1" dist.	Held load, <1" dist.	Held load, <1" dist.
15	Held load, <1" dist.	Held load, <1" dist.	Held load, <1" dist.

*The stacking test results for each design type is a pass.

VIBRATION TEST: (49 CFR 178.608)

Three (3) drums with each type of lid were subjected to a Vertical Linear Motion Vibration Test at a frequency of 255 RPM and a table displacement of 1 inch (peak to peak), for a 1-hour time period (See Photo No. 10). Immediately following the period of vibration, the drums were turned on their sides for one minute and inspected for leakage.

CRITERIA FOR PASSING THE TEST:

A packaging passes the vibration test if there is no rupture or leakage from any of the packages. No test sample should show any deterioration, which could adversely affect transportation safety or any distortion liable to reduce packaging strength.

VIBRATION TEST RESULTS:

Sample No.	Non-Vented Screw Cap Closure	Vented Screw Cap Closure	Non-Vented Friction-Fit Closure
16	No Leakage	No Leakage	No Leakage
17	No Leakage	No Leakage	No Leakage
18	No Leakage	No Leakage	No Leakage

Sample No.	Vented Friction-Fit Closure	Non-Vented Crimp-On Closure	Vented Crimp-On Closure
16	No Leakage	No Leakage	No Leakage
17	No Leakage	No Leakage	No Leakage
18	No Leakage	No Leakage	No Leakage

Sample No.	Blank
16	No Leakage
17	No Leakage
18	No Leakage

*The vibration test results for each design type is a pass. It should also be noted that there was slight scuffing on the bottom of the drum for each design type.

Gaynes Laboratory, Inc.

3. CONCLUSION:

On the basis of the tests conducted, the submitted package types, described as a 5-Gallon Removable Head Plastic Drum with Five (5) Closure Designs on the Top Lid and a Blank Lid, passed the Periodic Retest Requirements of the Code of Federal Regulations, Title 49-Transportation, paragraphs 178.603, 178.604, 178.605, 178.606 and 178.608 for Packing Group II Test Level, 1.5 Specific Gravity.

Notes: The packagings used in testing are to represent the containers as prepared for actual transport. The use of any other packaging methods or components may render the package invalid and may be subject to fine by DOT.

It is the shipper's responsibility to comply with all pertinent requirements for specific material being shipped, including requirements for quantities of materials, various transportation modes and any additional requirements, which may be imposed by various carriers.

Gaynes Laboratory, Inc.

SECTION 4 – CALCULATIONS (USING HEAVIEST COMPONENTS):

1. Empty Package Weight (Tare)

Weight of Empty Drum	0.9085 kg.
Handle	0.0484 kg.
Grip	0.0029 kg.
Lid (including closure/ gasket)	0.4565 kg.
Total	**1.4163 kg.**

Filled Package Weight

Overflow Capacity	19.504 Lit.
Weight of liquid fill 19.550 x 0.98 =	19.113 kg.
Weight of Filled Package 19.113 + 1.4163 =	**20.529 kg.**

2. Drop Test Height

Specific Gravity of Certification 1.5
Packaging Group of Certification II

For PG II up to 1.2 SG	1.2 meters
For PG II above 1.2 SG, SG x 1.0 meters, 1.5 x 1.0 =	**1.5 meters**

3. Stack Test Weight

Load = (n-1) x [W + (L x S)] x 1.5
Where:
N = number of containers to reach 3 meters - rounded up to the next whole number
W = Tare weight of all packaging materials
L = Weight of liquid fill
S = Maximum specific gravity

Package Stacking Height = 36.20 cm (14.25")
3.0 meters / 0.3620 meters = 8.3 rounded up to 9

(9-1) x [1.4163 + (19.113 x 1.5)] x 1.5 = 361.1 kg. (797 lbs.)

The above weight is rounded up.

Gaynes Laboratory, Inc.

INSTRUMENTATION:

Instrument or Equipment	Manufacturer	Model Number	Serial Number	Calibration Date
Drop Tester	Gaynes	150DT	G69676	Operational
Compression Machine	Satek Systems	30B	1027	Operational
Digital Gram Scale	Setra	5000c	161452	08-03-26
Electronic Scale	Triner Scale	TS-700	AE0221025012	09-09-25
Digital Caliper	Fowler	54-101-300-1	22010678	05-02-26
Temperature Chamber	CSZ	ZH32-2-2-H/AC	Z0023378/1	Operational
Chart Recorder	Honeywell	DR45AT	A472	04-10-26
Pressure Gauge	Cecomp Electr.	DGP1000AD	7603101001	07-20-26
Digital Thermometer	Fluke	2165A	0851042	10-14-25
Strip Chart Recorder	Kipp & Zonen	BD40	EV40-891142	Prior to Use
Vibration Machine	Gaynes	6000 VL	4631	Operational
Strobotac	Gen. Radio	1531-A	514488	Prior to Use
Controlled Environment Room 23° C (73° F), 50% R. H.	Gaynes	- - - - - -	- - - - - -	Operational
Plate Closer	Letica	Pneumatic	1963.02	Operational



Photo No. 1 - Top Diagonal Drop Setup



Photo No. 2 - Closure Position During the Top Diagonal Drop Test



Photo No. 3 - Flat Side Drop Setup

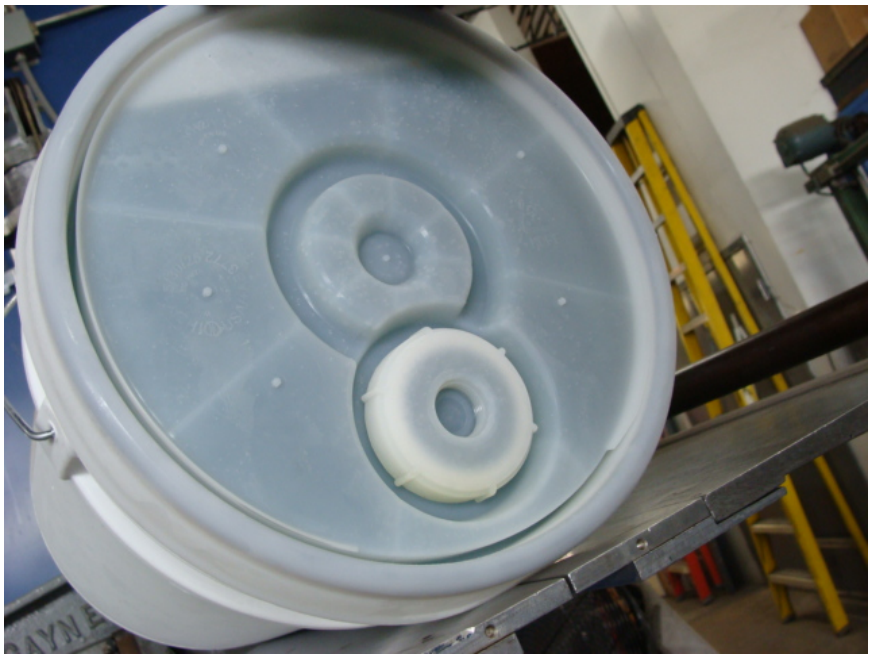

Photo No. 4 - Closure Position During the Flat Side Drop Test



Photo No. 5 – Slight Distortion on Lid After the Diagonal Drop



Photo No. 6 – Slight Distortion on the Drum After the Side Face Drop

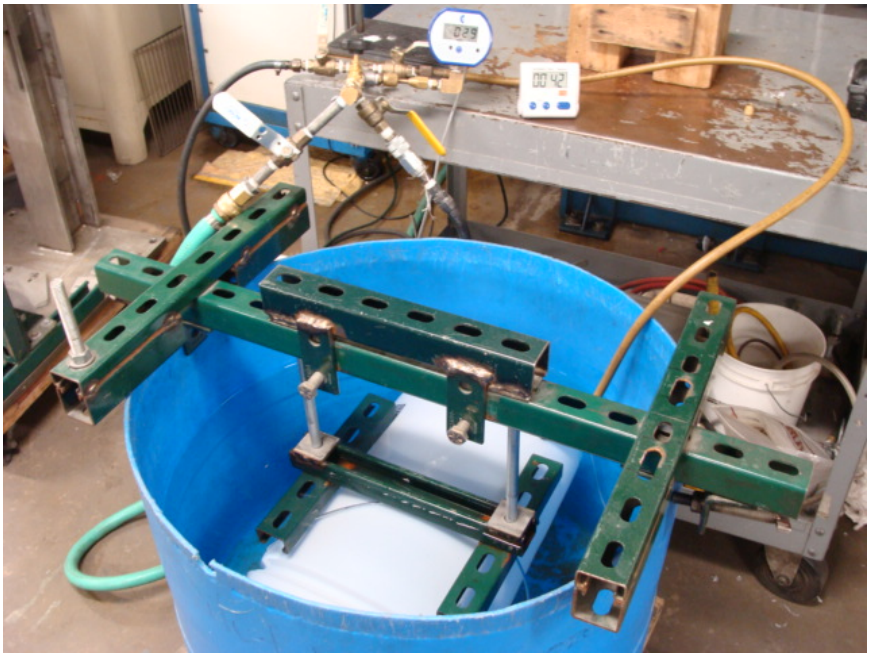

Photo No. 7 - Leakproofness Test Setup



Photo No. 8 - Hydrostatic Pressure Test Setup



Photo No. 9 –Vibration Test Setup



Photo No. 10 –Stacking Test Setup

Gaynes Laboratory, Inc.

GENERAL STATEMENT COVERING THIS REPORT

This report is submitted for the exclusive use of Berry Global. Its significance is subject to the representative nature of the samples submitted and the tests and examinations made. No quotations from this report or use of the Gaynes Labs, Inc., name is permitted except as expressly authorized by Gaynes Labs, Inc. in writing.

The Third Party approval mark furnished indicates only that Gaynes Labs, Inc., as a third party certification agency, is certifying that the design type they tested is capable of withstanding the prescribed performance tests. The third party mark does not mean that Gaynes Labs, Inc. is responsible for ensuring that each packaging manufactured after they have certified the design type is capable of withstanding the prescribed tests. The actual manufacturing of the packaging can be identified through the test number marked on the packaging in association with the third party designator. By continuing to place the U.N. Markings on Packagings, the packaging manufacturer or shipper is certifying that each packaging is constructed in the same manner as the originally tested and certified packaging, and that each packaging is capable of withstanding the prescribed performance tests.

Gaynes Labs, Inc., assumes no responsibility for the result of the observance or non-observance by Berry Global of the package standard contained in this report or upon the relations between Berry Global and any party or parties arising out of the sale or use of the package or otherwise.

Berry Global shall indemnify and hold harmless the Gaynes Labs, Inc., its employees and agents from any and all claims, demands, actions, and costs that may arise out of the following conditions:

(a) Any dangerous defect or content in the package being tested, whether apparent or not, which dangerous defect or content was not disclosed in writing to Gaynes by Berry Global at the time the package was submitted for testing.

(b) Differences between the package actually tested and a package previously or subsequently produced which is purported to be identical to the package tested.

(c) Any use of the tested package, whether by Berry Global or a third party following its return to Berry Global from Gaynes Labs, Inc.

Gaynes Labs, Inc.

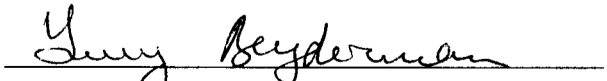

Yury Beyderman

DOCUMENT NO: **QWI-00352**	**PROCESS:** **17 - Production**	**PAGE 1 of 3**
QWI_00352_UN_Container_Closing_Instructions.docx	**VERSION:** 2.0	**MODIFIED:** 01/21/19
Uncontrolled copy; see footer for location of controlled document		

1.0 Purpose:

In compliance with 49 CFR §178.2(c), persons shipping Letica Corporation containers must comply with the following closure instructions.

2.0 Application Methods:

Letica Product	Recommended Mechanism	Material Type Packaged
5UND Container / 5LUND Lid	Pneumatic Press	Liquid Hazardous Materials Group II & III
5DMU Container / 5LUND Lid	Pneumatic Press	Liquid Hazardous Materials Group II & III
20NSU Container / 5LUND Lid	Pneumatic Press	Liquid Hazardous Materials Group II & III
20NEU Container / 5LUND Lid	Pneumatic Press	Liquid Hazardous Materials Group II & III
5100U Container / 5LUND Lid	Pneumatic Press	Liquid Hazardous Materials Group II & III
3590U Container / 5LTBU Lid	Pneumatic Press	Solid Hazardous Materials Group II & III
5DMU Container / 5LTBU Lid	Pneumatic Press	Solid Hazardous Materials Group II & III
20NSU Container / 5LTBU Lid	Pneumatic Press	Solid Hazardous Materials Group II & III
6RU Container / 5LTBU Lid	Pneumatic Press	Solid Hazardous Materials Group II & III
65RU Container / 5LTBU Lid	Pneumatic Press	Solid Hazardous Materials Group II & III
7RUN Container / 5LUND Lid	Pneumatic Press	Solid Hazardous Materials Group II & III

The Letica Corporation does not recommend the use of a mallet or roller closure for lid application. A pneumatic press is the recommended equipment for applying lids to Letica Corporation UN designated containers.

3.0 Pneumatic Press:

3.1 Design Criteria:

3.1.1 The frame of the pneumatic press and the surface Where the container stands must be of significant strength to resist deflection during the application of a lid.

3.1.2 The closing plate has to be parallel to the base, within 1/32" (.79 mm), and be of sufficient strength to withstand deflection during the application of a lid (the plate should be made of steel, have a minimum thickness of 1/4", and have a minimum diameter of 13").

3.1.3 A burp plug must be installed in the center of the closing plate. Dimensions for the burp plug are 2 3/4" in diameter and 3/4" in depth.



3.2 Press Setup:

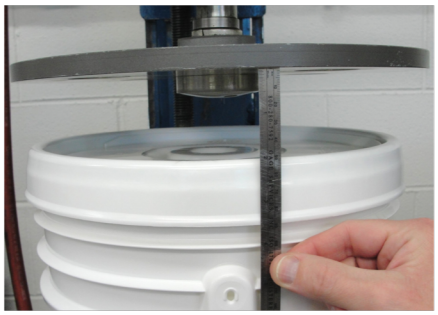

3.2.1 The size and pressure of the pneumatic cylinder is dependent on the type of lid and pail. Packages meeting the requirements for UN liquid or solid hazardous materials are to utilize a cylinder with a 6" minimum diameter. The air pressure supplied to this cylinder is to be a minimum of 90 psi of uninterrupted air (load = 2545# min) and is not to exceed 110 psi (load = 3110# max).

3.2.2 The height of the plate should be set to between 1.5" and 2.5" above the package with the lid positioned for closure.

3.3 Lid Application:

Note: The fill level of the product in the container is not to interfere with the lid when closing.

3.3.1 Visually verify the container is undamaged including dents, nicks, scratches, etc.

3.3.2 Visually verify that the lid is undamaged, that any fittings are properly installed, and that there is a gasket fully installed in the lid.

3.3.3 Position the lid on the container with the fitting located between the handle attachment points. Be sure the lid is centered on the container.

3.3.4 Center the container / lid under the plate.

3.3.5 Confirm that the area is clear of anything that may potentially interfere with the plate travel and engage the closer. *The lid should lock with minimal hesitation (< 2 seconds) and produce an audible "snap".

3.3.6 Verify that the lid is fully locked and that the perimeter of the lid skirt is free from bulging or flaring. If the lid skirt is bulged or appears uneven it may indicate that the lid is not fully locked.

Caution: ***Insufficient momentum of plate travel may result in incomplete closure.**

***If difficulties are encountered in the closing process place any affected containers in quarantine and contact The Letica Corporation for further instructions.**

DOCUMENT NO: **QWI-00352**	**PROCESS:** **17 - Production**	**PAGE 3 of 3**
QWI_00352_UN_Container_Closing_Instructions.docx	**VERSION:** 2.0	**MODIFIED:** 01/21/19
Uncontrolled copy; see footer for location of controlled document		

4.0 Applicable Lid Attachments - No substitutes to the below identified attachments may be made.

Lids	Attachments
5LUND	Plain Lid APC 25 Pour Spout APC 25 Pour Spout - Vented Tri-Sure 70mm Screw Cap Tri-Sure 70mm Screw Cap - Vented Uni-Grip Flexspout **Notes:** **The "APC25 Pour Spout" is the only option available for the 7RUN.** **The "APC25 Pour Spout" and the "APC25 Pour Spout – Vented" are the only options available for the 5100U.**
5LTBU	Plain Lid

Application of the lid attachments is as follows:

4.1 The APC closures require the use of an APC Installation Press with the following specifications: pneumatic cylinder – air pressure 100 psi, 5 inch stroke, 4 inch diameter bore, floating piston – minimum air pressure of 25 psi.

4.2 A recommended torque of 9 +6 / -2 ft-lbs is to be applied on the Tri-Sure 70mm PLASTICAP™ (Screw Cap) with EPDM rubber gasket. (Nominal 9 ft-lbs, range 7 – 15 ft-lbs / 108 in-lbs, range 84 – 180 in-lbs).

4.3 A Tri-Sure "Uni-Grip Hold Down Unit" is the recommended method for the application of the Uni-Grip spouts. Verification of the crimp must be performed using a Uni-Grip Crimp On "Go" Gage.

Caution: Improper installation of an attachment may result in leakage.

Gaynes Laboratory, Inc.

Letica® CORPORATION

5UND / 5DMU

PRODUCT SPECIFICATION SHEET

DIMENSIONS

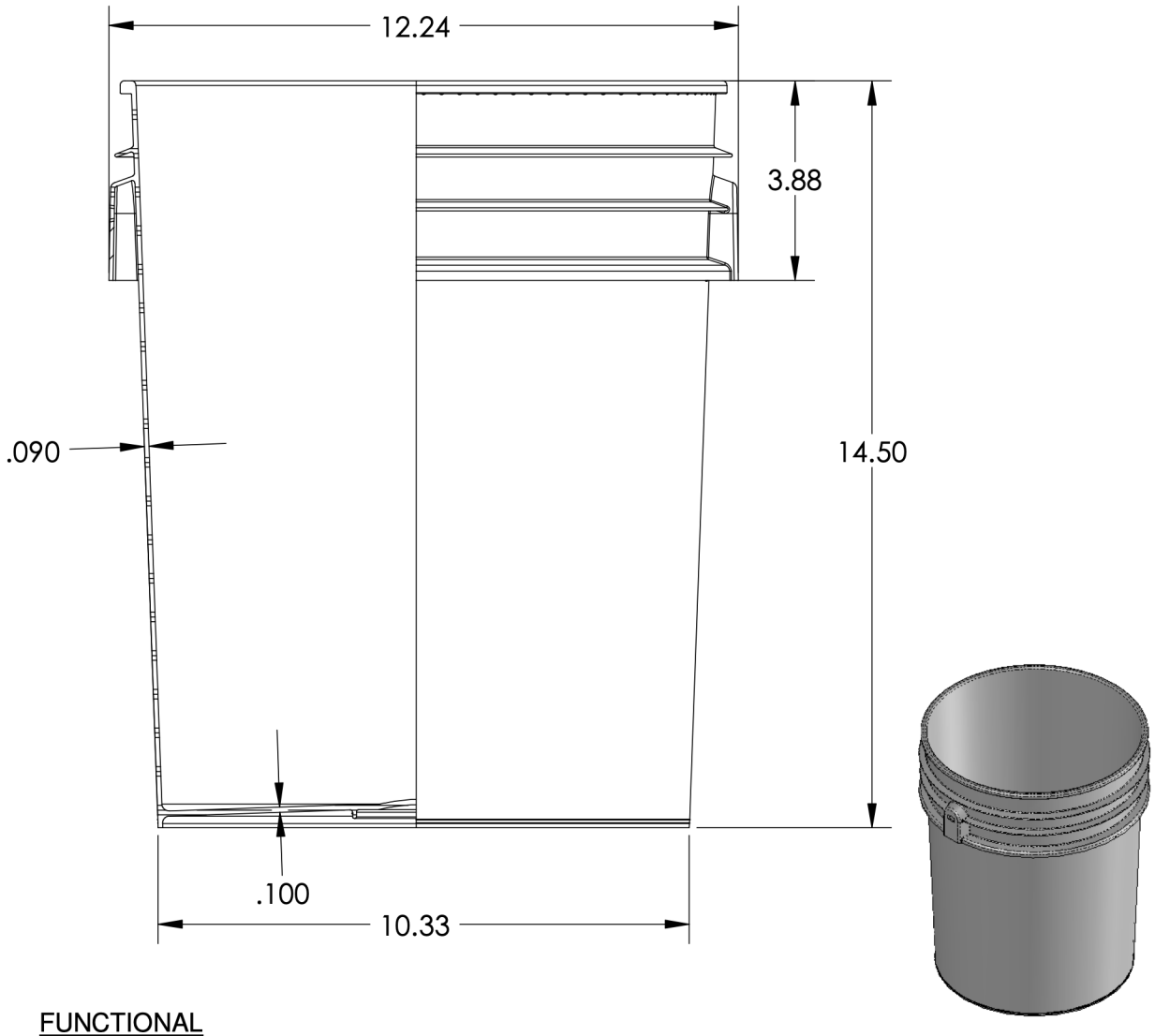

FUNCTIONAL

REFERENCE WEIGHT	930g
PRINT AREA	8.25" x 31.00"
PRACTICAL FILL VOLUME	5G
OVERFLOW VOLUME	5.6G
COLOR OPTIONS	PLEASE CONTACT SALES ASSOCIATE
RESIN	PREMIUM INJECTION GRADE HDPE

DATE: 11JUL2016

DWG: SPECP-2035P-UN

ALL RIGHTS TO THIS DRAWING, AS WELL AS THE PROPRIETARY AND NOVEL FEATURES OF THE SUBJECT MATTER, ARE RESERVED BY LETICA CORP. AND ARE NOT TO BE MANUFACTURED, USED, SOLD OR DISCLOSED TO OTHERS. THIS DRAWING IS TO REMAIN THE PROPERTY OF LETICA CORP. AND SHALL NOT BE COPIED OR REPRODUCED WITHOUT THE EXPRESS PERMISSION OF LETICA CORP. ALL DIMENSIONS SHOWN ARE FOR REFERENCE.

Gaynes Laboratory, Inc.

Letica CORPORATION	5LUND	PRODUCT SPECIFICATION

DIMENSIONS

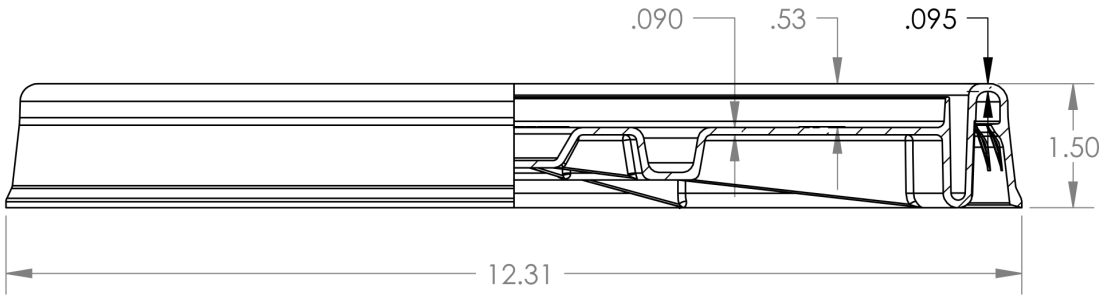

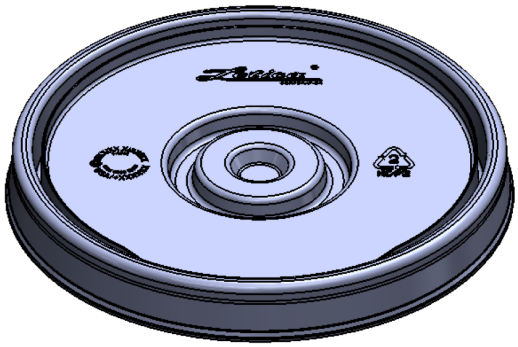

FUNCTIONAL

REFERENCE WEIGHT	396g
CLOSURE OPTIONS	PLEASE CONTACT SALES ASSOCIATE
GASKET	.250" x .050" x 35.88"
COLOR OPTIONS	PLEASE CONTACT SALES ASSOCIATE
COMPATIBLE CONTAINERS	5UND
RESIN	PREMIUM INJECTION GRADE HDPE

DATE: 27APR2009	ALL RIGHTS TO THIS DRAWING, AS WELL AS THE PROPRIETARY AND NOVEL FEATURES OF THE SUBJECT MATTER, ARE RESERVED BY LETICA CORP. AND ARE NOT TO BE MANUFACTURED, USED, SOLD OR DISCLOSED TO OTHERS. THIS DRAWING IS TO REMAIN THE PROPERTY OF LETICA CORP. AND SHALL NOT BE COPIED OR REPRODUCED WITHOUT THE EXPRESS PERMISSION OF LETICA CORP. ALL DIMENSIONS SHOWN ARE FOR REFERENCE.
DWG: SPECL-3100P	

Gaynes Laboratory, Inc.

Letica CORPORATION	5LUND-70MMSC	DESIGN SPECIFICATION SHEET
PRODUCT CODE: 70MMSC OPENING		DRAWING NUMBER: L-3100
RESIN CODE: HDPE		SPECIAL REQUIREMENTS:
MOLD NUMBER:		

Gaynes Labs

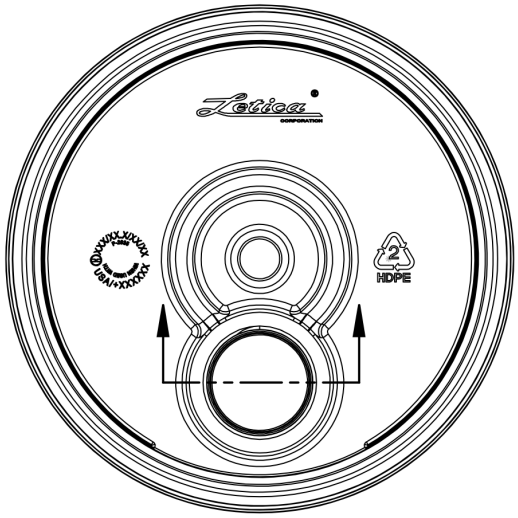

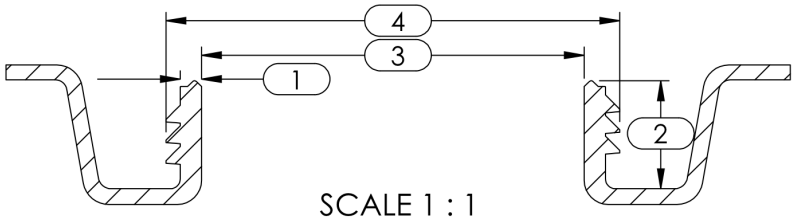

SCALE 1 : 1

FUNCTIONAL DIMENSIONS

	SPECIFICATION
1	.129
2	.654
3	2.319
4	2.749

DATE: 21APR2010

DWG: SPECL-3100_70MM_GAYNES

ALL RIGHTS TO THIS DRAWING, AS WELL AS THE PROPRIETARY AND NOVEL FEATURES OF THE SUBJECT MATTER, ARE RESERVED BY LETICA CORP. AND ARE NOT TO BE MANUFACTURED, USED, SOLD OR DISCLOSED TO OTHERS. THIS DRAWING IS TO REMAIN THE PROPERTY OF LETICA CORP. AND SHALL NOT BE COPIED OR REPRODUCED WITHOUT THE EXPRESS PERMISSION OF LETICA CORP. ALL DIMENSIONS SHOWN ARE FOR REFERENCE.

Gaynes Laboratory, Inc.

Letica CORPORATION	5LUND-APC	DESIGN SPECIFICATION SHEET
PRODUCT CODE: APC OPENING		DRAWING NUMBER: L-3100
RESIN CODE: HDPE		SPECIAL REQUIREMENTS:
MOLD NUMBER:		

Gaynes Labs

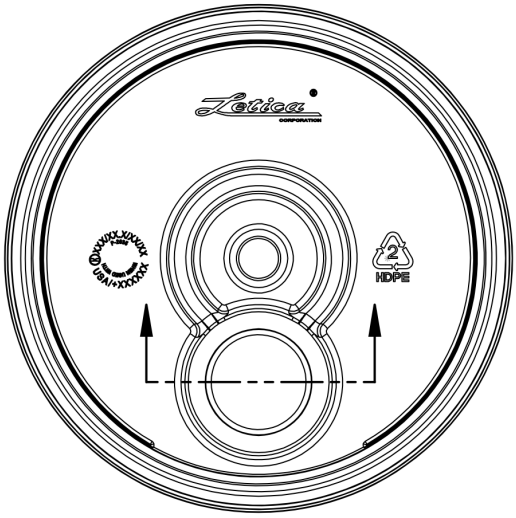

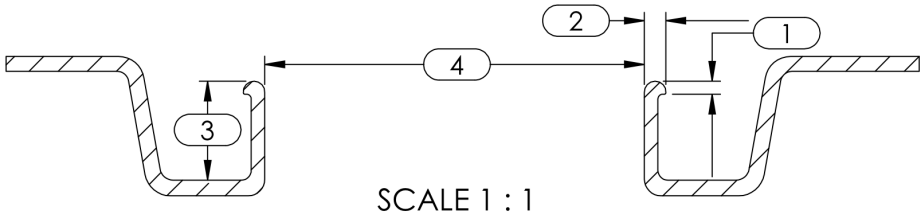

SCALE 1 : 1

FUNCTIONAL DIMENSIONS

	SPECIFICATION
1	.079
2	.130
3	.600
4	2.300

DATE: 21APR2010
DWG: SPECL-3100_APC_GAYNES

ALL RIGHTS TO THIS DRAWING, AS WELL AS THE PROPRIETARY AND NOVEL FEATURES OF THE SUBJECT MATTER, ARE RESERVED BY LETICA CORP. AND ARE NOT TO BE MANUFACTURED, USED, SOLD OR DISCLOSED TO OTHERS. THIS DRAWING IS TO REMAIN THE PROPERTY OF LETICA CORP. AND SHALL NOT BE COPIED OR REPRODUCED WITHOUT THE EXPRESS PERMISSION OF LETICA CORP.

Gaynes Laboratory, Inc.

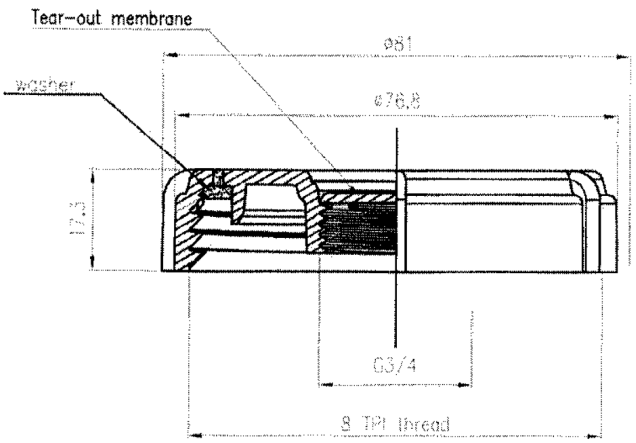

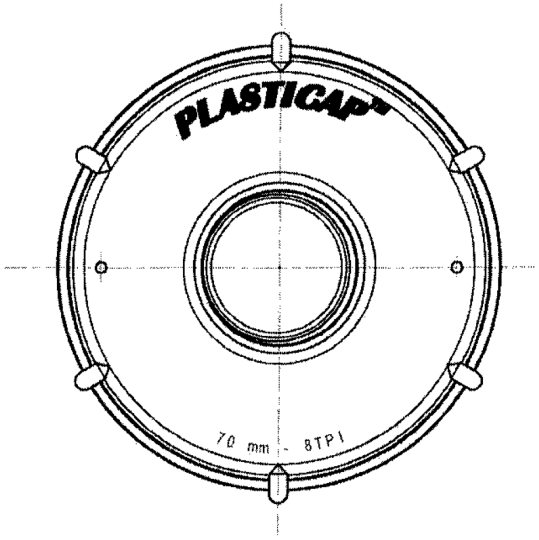

.	1	PLASTICAP–70(TM) – 8TPI thread–central hole	S9	HDPE	Neutral
Item n°	Qty	Description	Product Reference	Material	Colour

Drawn: Sebastien Ledemensy
Checked: Kees Van de Klippe
Passed: Tom Palmer

Title: PLASTICAP–70(TM) screw cap – 8TPI thread
without tamper evident ring – G3/4 tap holder

Tri-Sure® CLOSURES WORLDWIDE

Greif France S.A.S. Division Tri-Sure
Chemin du Gord, BP 181
76121 LE GRAND QUEVILLY Cedex
FRANCE

Customer Drawing:	Rev:	Date:	Scale:	Size:
TSF–2000067	1	20–06–2007	1:1	A4

This drawing is our property and is confidential. It must not be copied or shown to third parties. Printed versions are uncontrolled.

Gaynes Laboratory, Inc.

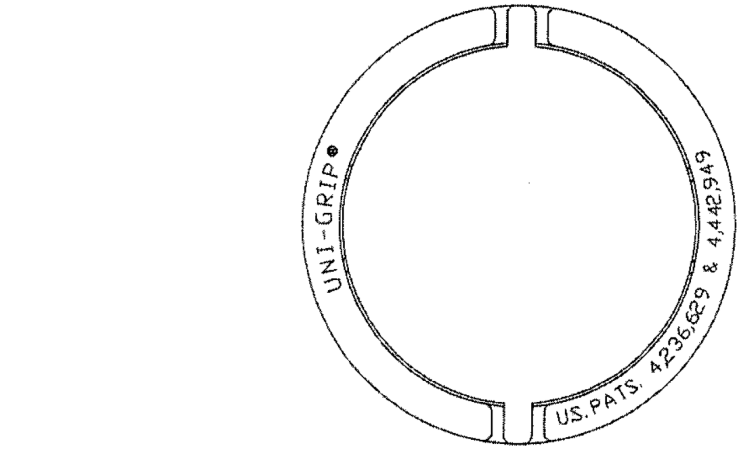

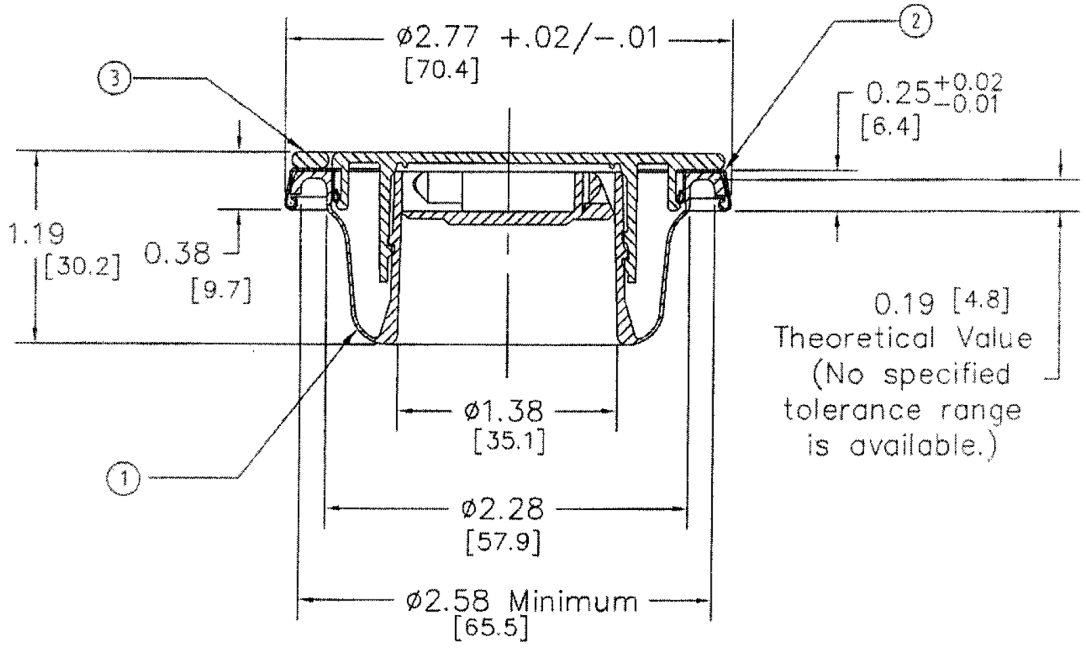

ALL DIMENSIONS ARE LISTED IN ENGLISH UNITS – INCHES
The dimensions in brackets [xx.x] are in METRIC – Millimeters(mm).

Item n°	Qty	Description	Material	Hardness	Remarks
3	1	CAP	HDPE	N/A	N/A
2	1	RING	STEEL	N/A	N/A
1	1	SPOUT	LDPE	N/A	N/A

Drawn: Carl Pomilia
Checked: Mark Comella
Passed: Kees van de Klippe

Title: Uni-Grip 60C
Customer Drawing

Tri-Sure® CLOSURES WORLDWIDE

American Flange & Manufacturing Co, Inc.
260 E. Fullerton Avenue
Carol Stream, IL 60188

Drawing number: CPD939634900 | Rev: B | Date Released: 7/31/09 | Size: A

This drawing is our property and is confidential. It must not be copied or shown to third parties. Printed versions are uncontrolled.

Gaynes Laboratory, Inc.

APC Products Limited

www.pailclosures.com Tel: 905-457-0887 Fax:905-459-3983

APC-2 PRODUCT SPECIFICATION 9-2

DESCRIPTION	**APC-2 PLASTIC PAIL CLOSURE**
PART NUMBERS	**APC- 25** Rev 7 for 5 mm minimum cover bead height **APC- 27** Rev 9 for 7 mm minimum cover bead height
PART DRAWINGS	AD9-2.2 Rev 3 APC- 2 Plastic Pail Closure AD9-2.3 Rev 6 APC- 2 Closure Assembly & Cover Opening EX9-2.5 Rev 1 APC- 2 Plastic Pail Closures Sales Brochure
CLOSURE SIZE	38 mm (1.5 inch) neck thread diameter 44 mm (1.8 inch) body height extended
COVER OPENING	65 mm (2.56 inch) cover beaded rim outside diameter AD9-2.3 Rev 5 APC-1 & 2 Closure Assembly & Cover Opening
CLOSURE WEIGHT	27 Grams +/- 1
MATERIAL & COLOR	FDA approved virgin resins CAP – high density polyethylene, white BODY – EVA co-polymer low density polyethylene, natural
TAMPER EVIDENCE	CAP – 4 tabs must be broken to lift 2 bails BODY – internal diaphragm with pull ring molded into spout
INSTALLATION	Use installation press to fit onto warm or cold molded plastic covers Step # 1 – installation press forces cover beaded rim into closure body channel Step # 2 – the lock ring is pushed off the cap and into locking position around the closure body
PERFORMANCE *	Hydrostatic leak test target: 30 kPa (4.5 psi) water for 30 minutes
APPLICATION *	The closure is designed for UN Packing Group II and III applications up to 30 kPa subject to performance and product compatibility testing. Do not use for hot fill applications or UN Packing Group I applications.
CONTROL OF CHANGE	Specifications are subject to change. APC-2 buyers on record will be notified.

* These product specifications are intended as a guide only. Closures are manufactured under a TS16949 quality program. Sample closures are available for product testing. It is the responsibility of the buyer and filler to ensure the closure meets the product compatibility and performance requirements for both regulated and non-regulated packaging applications.

Exhibit 9-2 Rev 10 11-09

Gaynes Laboratory, Inc.

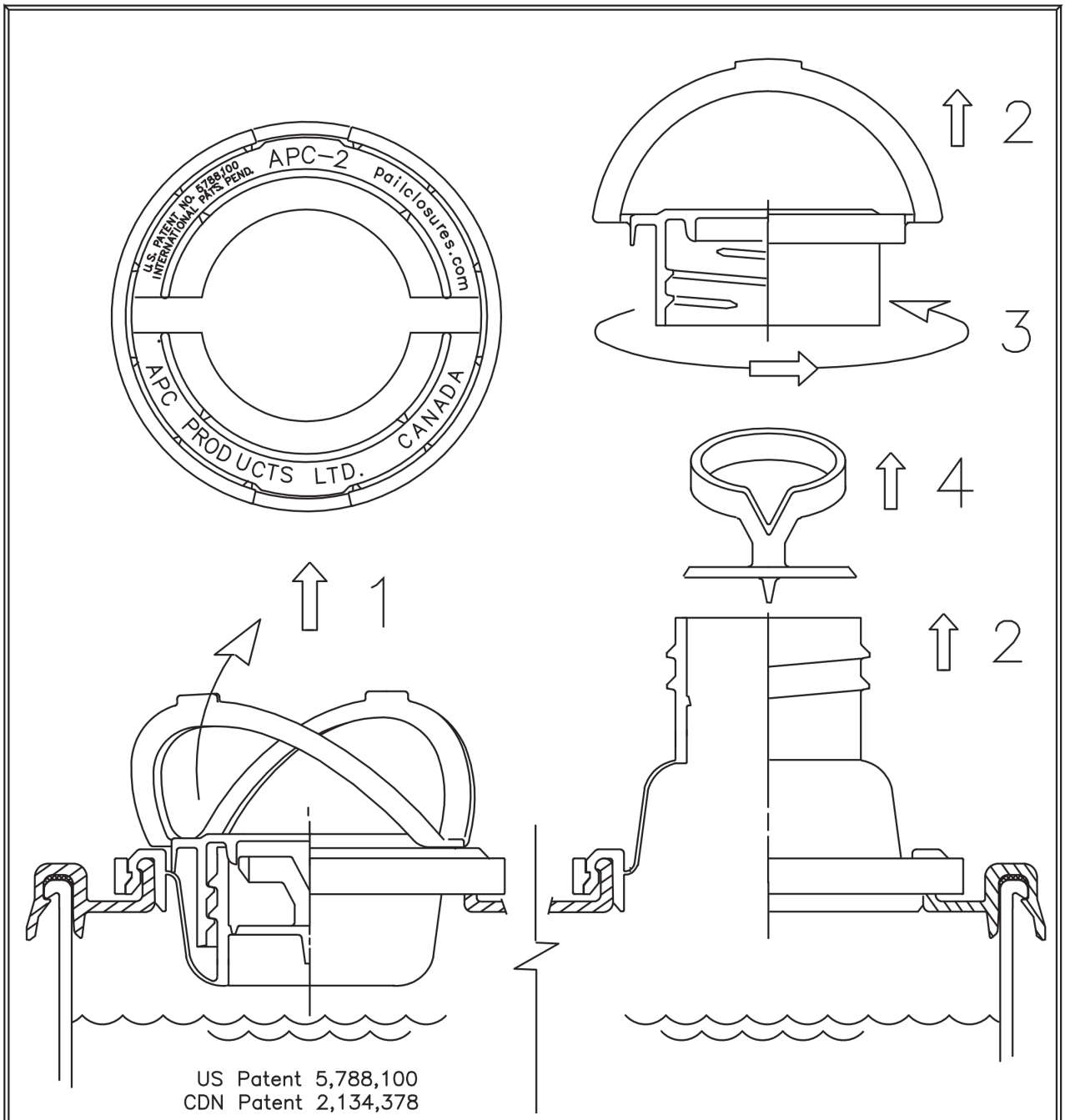

REV 3 7/02	CHANGE TITLE FROM CLOSURE USE TO PLASTIC PAIL CLOSURE	APC Products Limited CANADA www.pailclosures.com
REV 2 1/99	REINFORCE BAIL HINGES	
REV 1 12/98	ADD WEATHERTIGHT CAP SEAL	APC-2 PLASTIC PAIL CLOSURE
REV 0 4/98	PROTOTYPE APC-2 CLOSURE	
EXHIBIT 9-2.2	DRAWN BY R. STURK	SCALE 1:1 DRAWING AD9-2.2

Gaynes Laboratory, Inc.

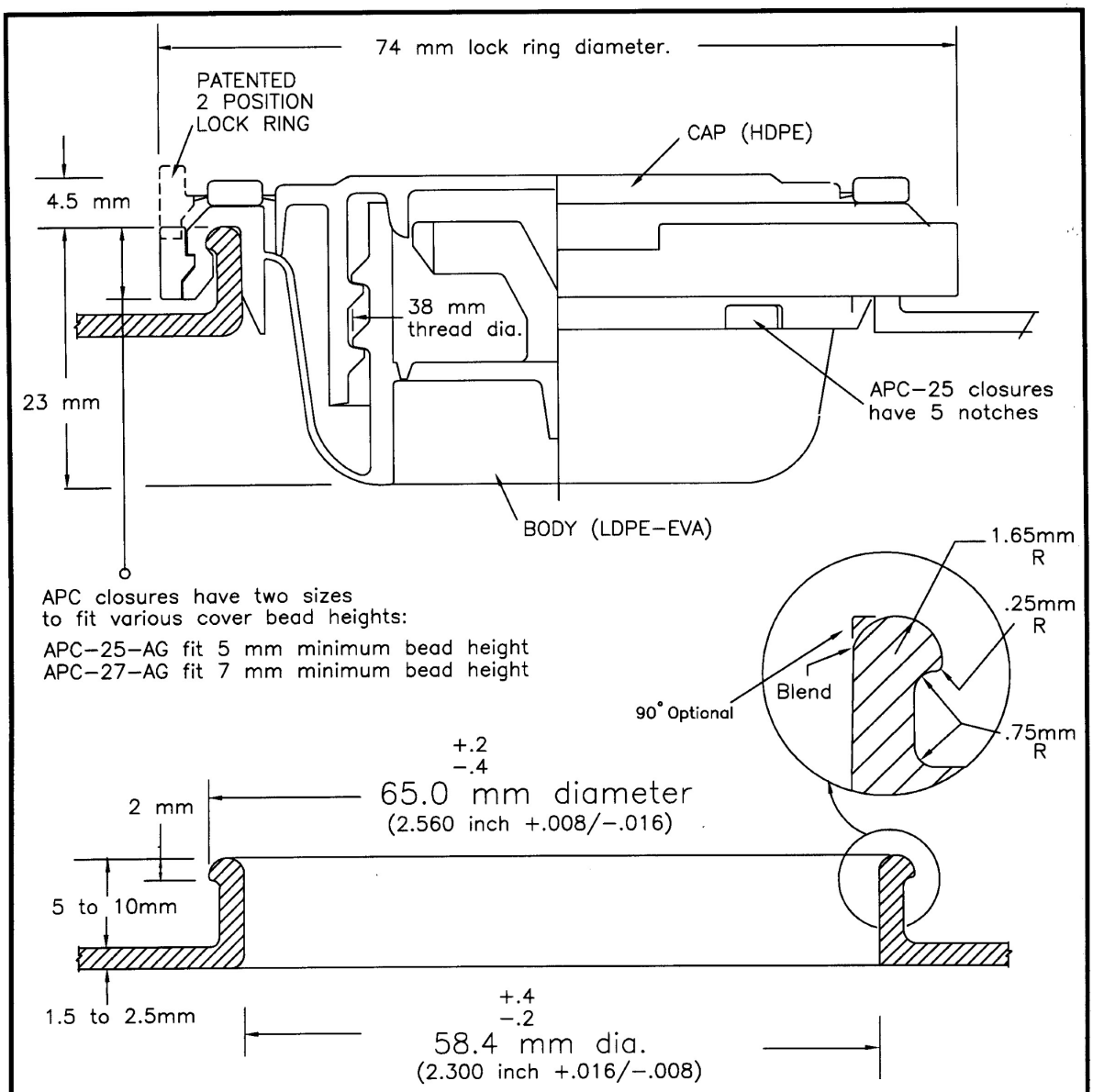

Gaynes Laboratory, Inc.

GA-1567 (GASKET) PRODUCT SPECIFICATION SHEET

DIMENSIONS

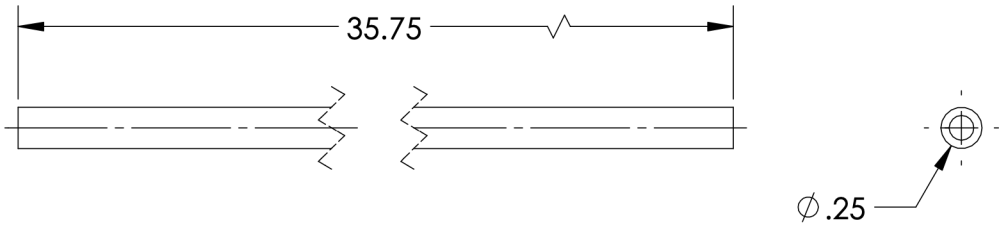

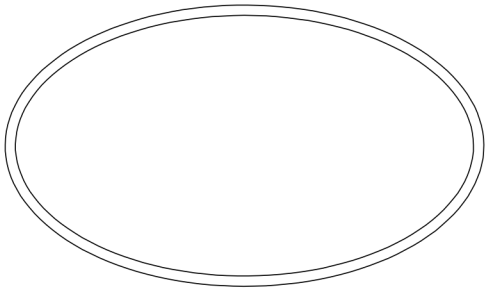

FUNCTIONAL

COLOR OPTIONS	PLEASE CONTACT SALES ASSOCIATE
COMPATIBLE LIDS	PLEASE CONTACT SALES ASSOCIATE
MATERIAL	EPDM

DATE: 1JULY2014
DWG: SPECGA-1567P

ALL RIGHTS TO THIS DRAWING, AS WELL AS THE PROPRIETARY AND NOVEL FEATURES OF THE SUBJECT MATTER, ARE RESERVED BY LETICA CORP. AND ARE NOT TO BE MANUFACTURED, USED, SOLD OR DISCLOSED TO OTHERS. THIS DRAWING IS TO REMAIN THE PROPERTY OF LETICA CORP. AND SHALL NOT BE COPIED OR REPRODUCED WITHOUT THE EXPRESS PERMISSION OF LETICA CORP. ALL DIMENSIONS SHOWN ARE FOR REFERENCE.

Gaynes Laboratory, Inc.

Letica CORPORATION

5-GAL HANDLE

PRODUCT SPEC SHEET

DIMENSIONS

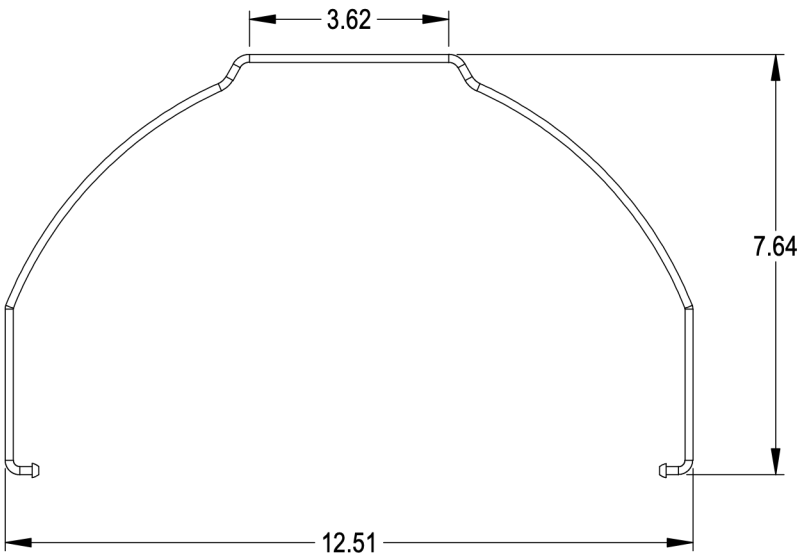

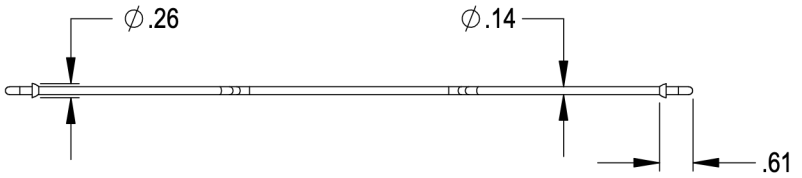

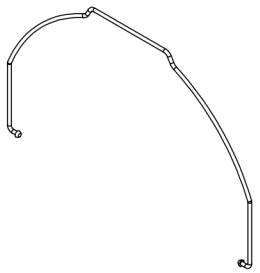

FUNCTIONAL

MATERIAL	STEEL WIRE
SURFACE FINISH	GALVANIZED
COMPATIBLE CONTAINERS	PLEASE CONTACT SALES ASSOCIATE

DATE: 29MAR2019
DWG: SPECPC-0034P

ALL RIGHTS TO THIS DRAWING, AS WELL AS THE PROPRIETARY AND NOVEL FEATURES OF THE SUBJECT MATTER, ARE RESERVED BY LETICA CORP. AND ARE NOT TO BE MANUFACTURED, USED, SOLD OR DISCLOSED TO OTHERS. THIS DRAWING IS TO REMAIN THE PROPERTY OF LETICA CORP. AND SHALL NOT BE COPIED OR REPRODUCED WITHOUT THE EXPRESS PERMISSION OF LETICA CORP. ALL DIMENSIONS SHOWN ARE FOR REFERENCE.